iGarden

iGarden Swim Jet H Series

User Manual

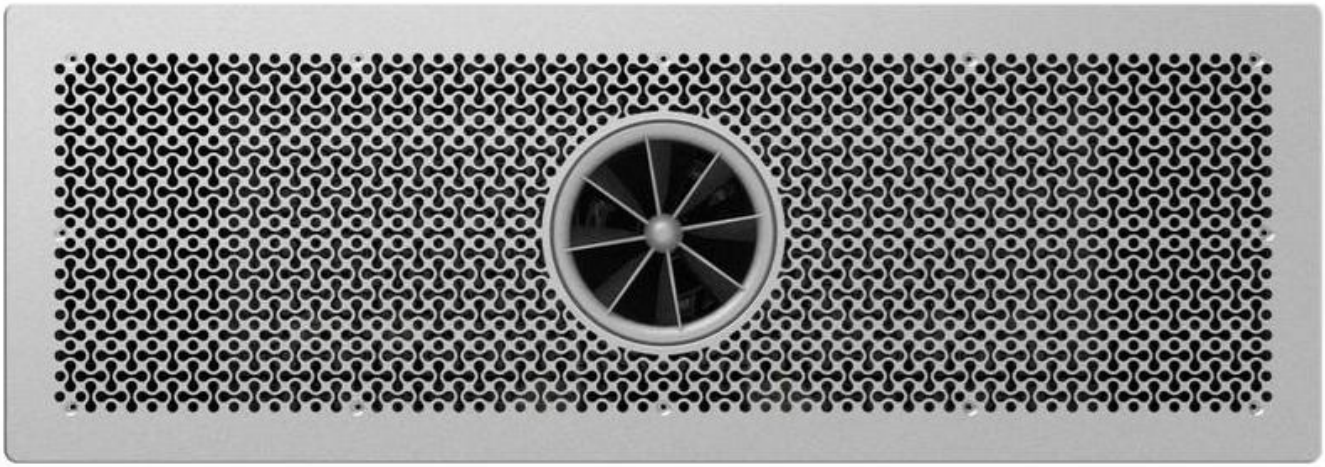

Content

1. Warnings and Important Safety Instructions 1

2. Recommended Installation Environment 2

3. Specification 4

4. Configurations and Diagram 4

5. Swim Jet Structure Diagram 5

6. Swim Jet Installation Process 7

7. Installation of Underwater Button (Optional) 23

8. How to Use Swim Jet 27

9. How to Use the Remote 32

10. APP Control 36

11. Product Care and Maintenance 41

12. Failure and Protection 41

13. FAQ & Solutions 44

14. Disposal 45

15. Certification Standards 45

1. ⚠ Warnings and Important Safety Instructions

Please read and follow all instructions before installation:

Always read this manual and follow all safety instructions before installing or using this product, and keep this manual in a safe place.

1.1 When installing and using the Swim Jet, please follow the below safety rules:

• Check the cables for signs of damage or wear before use. Should any issues arise, immediately cease operation and contact the dealer for repair or replacement.

• Do not operate the control panel until you have thoroughly read and understood all instructions in this manual.

• Before powering on, make sure that no one is near the inlet and outlet areas of the Jet.

• Avoid placing fragile items around the front cover of the Swim Jet.

• It is recommended that swimmers wear swimming caps and goggles during the use of Swim Jet.

• Consult a physician before use if you have any pre-existing medical conditions.

• If you experience chest pain or tightness in the chest, shortness of breath or feel dizzy while using, stop exercising immediately.

• Do not dive near the Jet to avoid unexpected accidents.

• Make sure that there are no obstacles around the Jet and it is fully submerged before powering on.

• This Swim Jet must be powered by a residual current protective device (RCD) with a rated residual action current of not more than 30mA, ensure that it is working properly before each use of the device.

• When not using the Swim Jet for a long time, please disconnect the power supply.

• ⚠ DANGER: Do not insert any abnormal matter into the water outlet.

• ⚠ DANGER: Do not attach any abnormal matter such as leaves, pieces of paper, garbage bags and other coverings to the water inlet and outlet.

• ⚠ DANGER: Do not run the Swim Jet if there is ice in the pool.

• ⚠ DANGER: Stop using this product if the user's body temperature is significantly higher than normal, which may result in serious consequences, including loss of consciousness and risk of drowning.

• ⚠ DANGER: Do not put the Jet cable plug into water, and do not plug or unplug with wet hands.

• ⚠ DANGER: When performing maintenance or overhaul operations on the Jet, the power box must be disconnected to ensure operator safety and to prevent electrical accidents or device damage.

• ⚠ WARNING: If the cable length is too long and the cable needs to be coiled into a circle, the diameter of the circle must be no less than 400 mm. If it needs to be coiled into multiple circles, please ensure that the diameter of each circle is no less than 400 mm, and it must be divided into multiple single circles on the ground.

• ⚠ WARNING: Wiring to the Swim Jet should be performed by a licensed electrician in accordance with all local, state and federal codes. The Jet cables are pre-wired to the drive output to ensure proper motor rotation, serious injury or death may result if the system is operated in reverse! If the Jet cable is replaced at the installation site, the installer must verify the correct direction of motor rotation (counterclockwise) and that the wiring pattern is correct! Failure to do so may result in serious injury or death.

1.2 Children Safety:

• Do not allow children to use this product without adult supervision.

• Ensure that children are closely supervised at all times while using the product.

• ⚠ DANGER: The remote control is for adults only and should be kept out of reach of children.

1.3 User Restrictions

• Individuals with limited physical/sensory or mental abilities should not use this product unless under the supervision of qualified personnel.

• This product should not be used after ingestion of alcohol, drugs or medications that affect responsiveness.

2. Recommended Installation Environment

• The operating ambient temperature of the power box and control panel: 0℃~ 43℃ (installed in a dry and non-condensing environment, avoiding exposure to sunlight and rain).

• Operating water temperature of the Jet: +5℃~ +40℃.

• Recommended installation depth of the Jet (center of Jet from the water surface): 250mm (need to ensure that the Jet is completely immersed in the water).

It is the responsibility of the Swim Jet user to provide suitable conditions to ensure the optimum life cycle of the product. To comply with the warranty conditions, the user should maintain the water quality to following level:

• pH value: 7.0-7.8

• Bound Chlorine: ≤0.5 mg/l

• Free chlorine: 0.3 mg/l to 2.0 mg/l

- Cyanuric acid: ≤100 mg/l
- Salt concentration: ≤0.4% (4000 ppm)
- Metal content: ≈0 mg/l
- Carbonate hardness: ≥2°dH
- Ozone (O3): 0 mg/l
- Total chlorite and chlorate: ≤30 mg/l
- Oxidation reduction potential (ORP): ≥700 mV

Non-intended use

- Not for use in potentially explosive areas.
- Not suitable for harsh environments that contains gases, acids, vapours, dust and oils.
- Not for sewage.

2205 Duplex Stainless Steel Instructions

The core components of this Swim Jet are crafted from 2205 Duplex Stainless Steel. Known for its exceptional corrosion resistance, 2205 duplex stainless steel is widely utilized in demanding environments such as marine engineering and aerospace. While this material offers superior performance, proper maintenance is essential to significantly extend the product's lifespan.

Recommendation:

1. Thoroughly clean all 2205 duplex stainless steel components after installation and before filling the pool with water.
2. Maintain the pH, salinity, and chlorine levels of your pool water within the standard range. Harsh water conditions can damage metal components or shorten the service life of the pool and its equipment.
3. Do not use hydrochloric acid to clean the concrete or tiles surrounding the Jet. If acid comes into contact with the stainless steel, rinse and neutralize it immediately.
4. Do not use carbon steel wool or wire brushes to clean the stainless steel.
5. During pool shock treatments or disinfection, the Swim Jet should remain in operation until chlorine levels return to normal.
6. If the pool water level drops and exposes the Jet to air, rinse the surface with fresh, clean water, or wipe it down using a sponge or lint-free cloth dampened with fresh water.
7. Do not use acidic, oil-based cleaners, or waxes. Minor stains can be removed with a damp cloth, vinegar, or

ammonia-based cleaners (such as window and surface cleaners).

8. Pool chemicals must never be added directly into the Swim Jet housing.

3. Specification

Swim Jet H Series Specific Technical Parameters				
Model	H100	H160	H200	H240
Supply Voltage	220-240V	220-240V	220-240V	220-240V
Frequency	50/60Hz	50/60Hz	50/60Hz	50/60Hz
Input power	400W	600W	900W	1250 W
Max Input Current	1.6A	2.7A	4.0A	5.7A
Max flow rate	100m³/h	160m³/h	200m³/h	240 m³/h
Maximum Outlet speed	2.4m/s	2.9m/s	3.5m/s	4.2 m/s

4. Configurations and Diagram

4.1 Configurations

SN	Description	Quantity
①	Housing	1
②	Jet	1
③	M20 Waterproof cable connector, 316L	3
④	Right bracket, Duplex 2205	1
⑤	Left bracket, Duplex 2205	1
⑥	M10 Hexagonal flange nut, Duplex 2205	4
⑦	M8×20 Hexagon socket head screw, Duplex 2205	4
⑧	Spring washer, Duplex 2205	4
⑨	Flat washer, Duplex 2205	4
⑩	7mm Gasket, EPDM	1
⑪	Flange plate, Duplex 2205	1
⑫	Hex Socket Truss Head Self-Tapping Screw, 316L	32
⑬	Front cover, ABS	1
⑭	M5x14 Hex Socket Countersunk Head Screw, 316L	12
⑮	DX510 Horizontal recessed fixture plate, Hot dip galvanized (HDG)	1
⑯	3mm Gasket, EPDM	1

Note: ⑫Hex Socket Truss Head Self-Tapping Screw, Divided into two types: M6x30 and M6x40, suitable for different swimming pool wall thicknesses.

4.2 Diagram

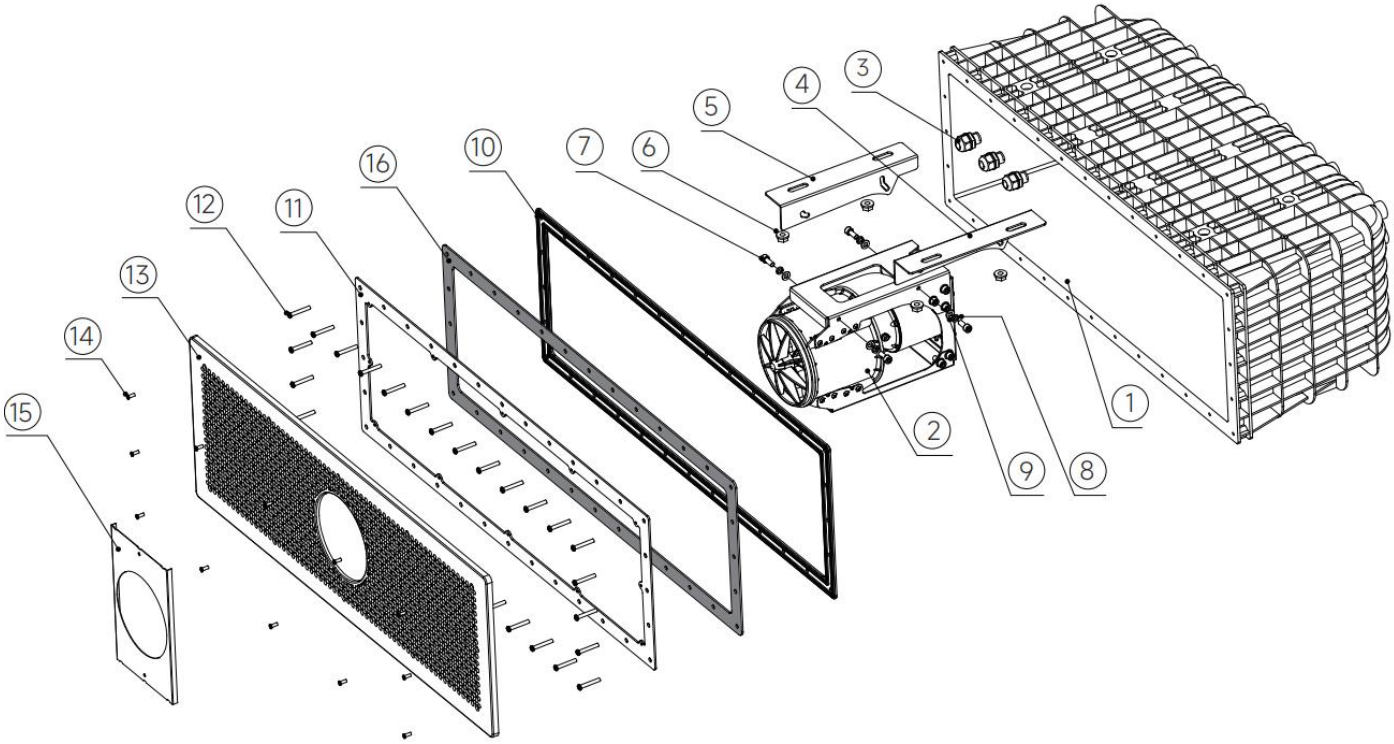

5. Swim Jet Structure Diagram

5.1 Housing Structure Diagram

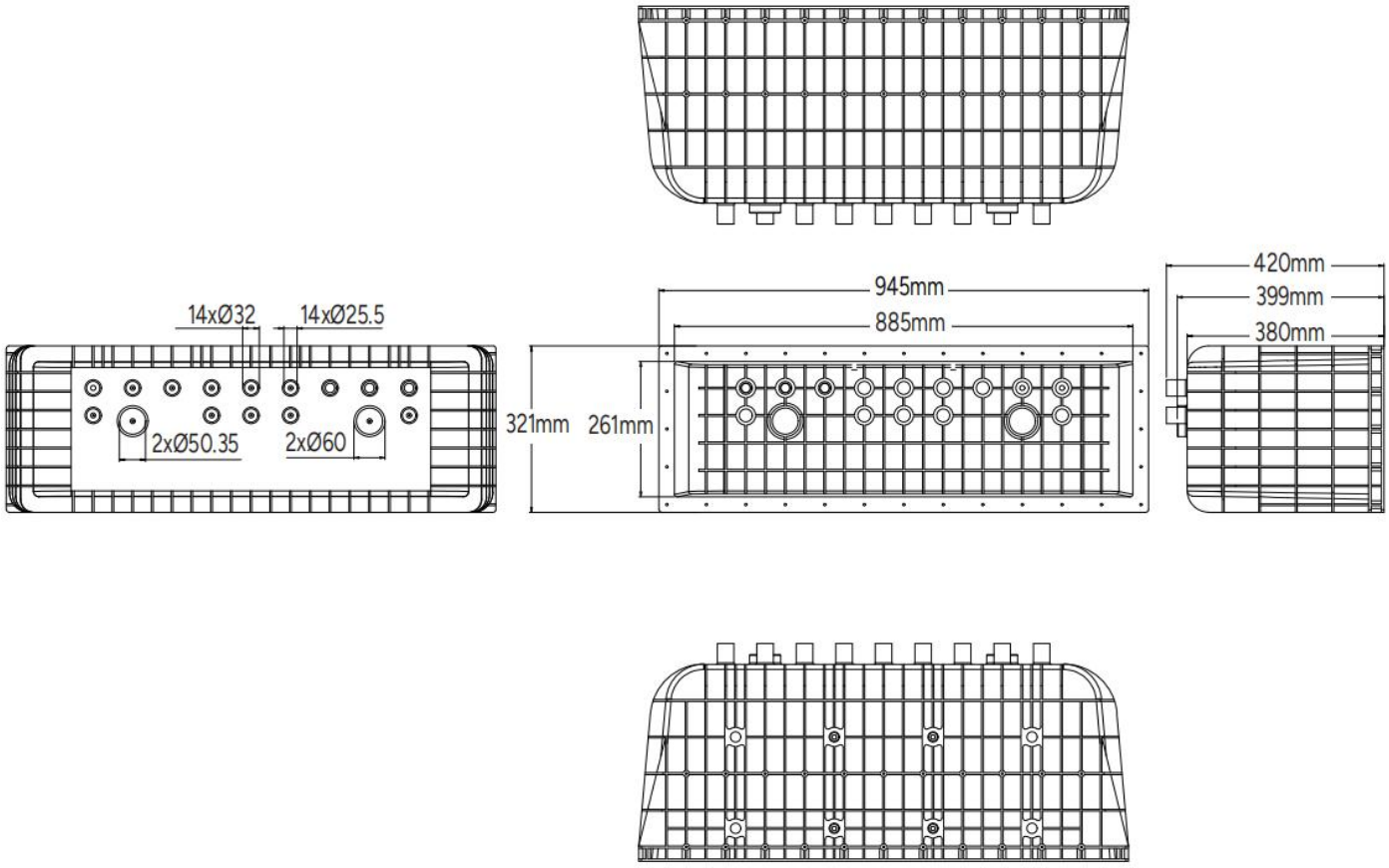

5.2 Front Cover Structure Diagram

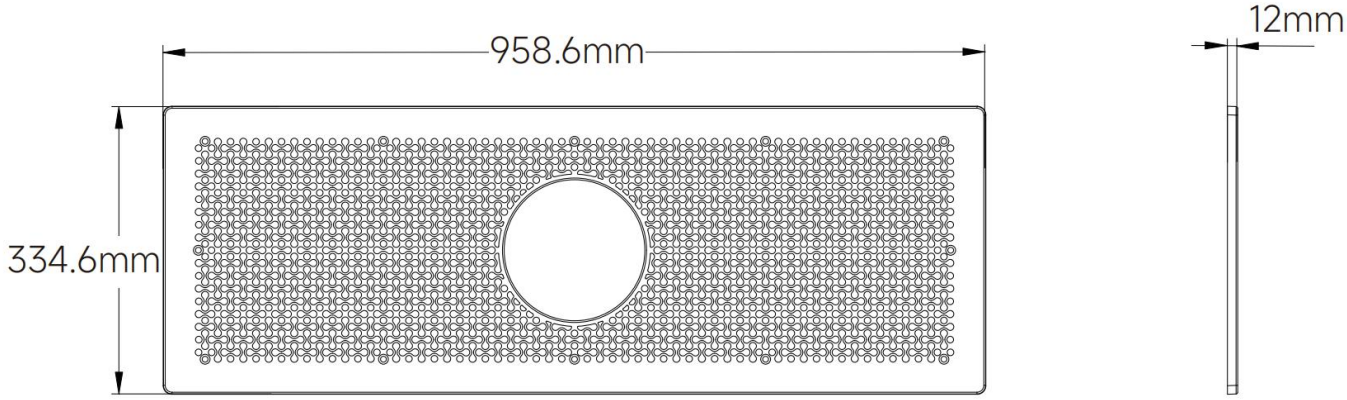

5.3 Power Box Structure Diagram

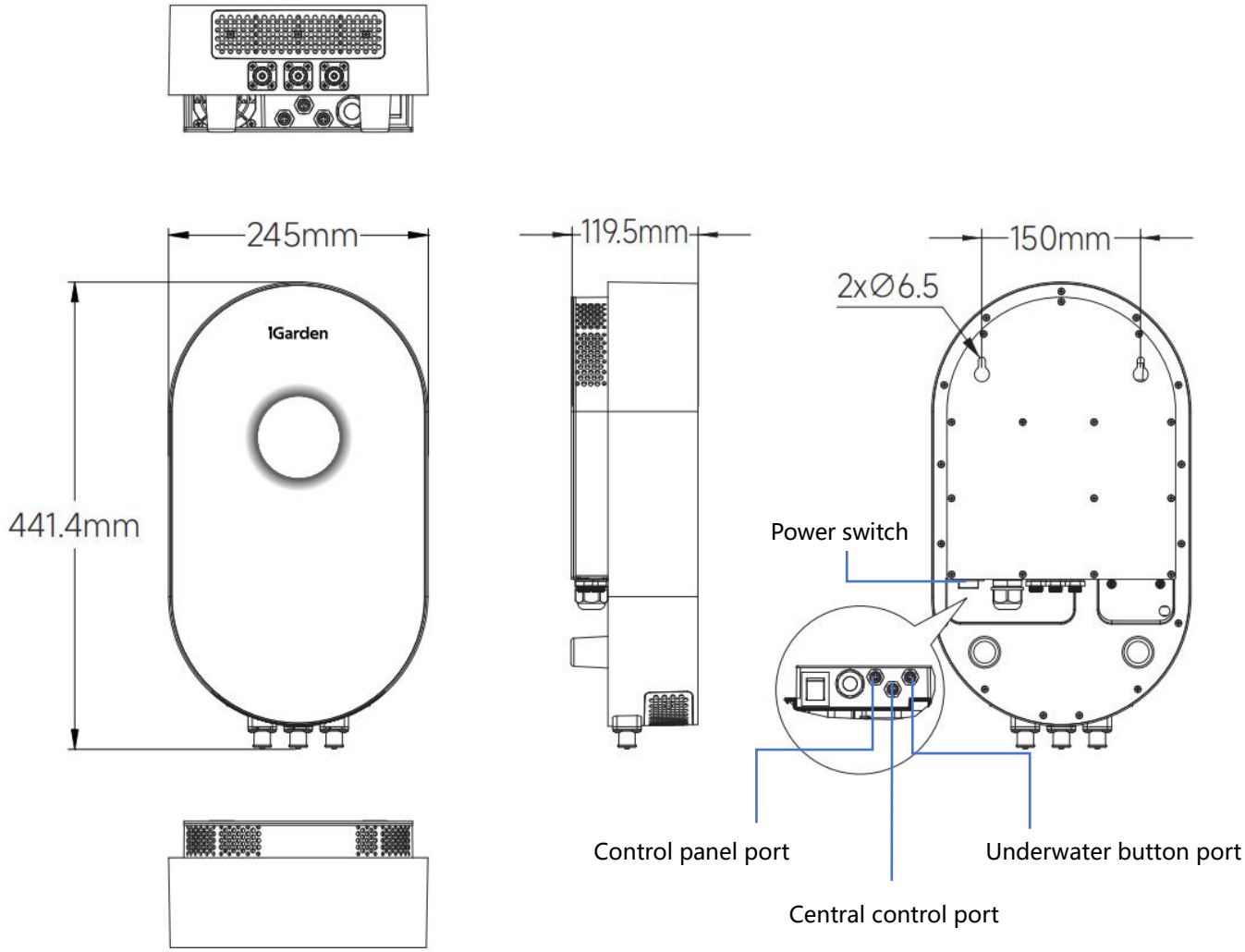

5.4 Control Panel Structure Diagram

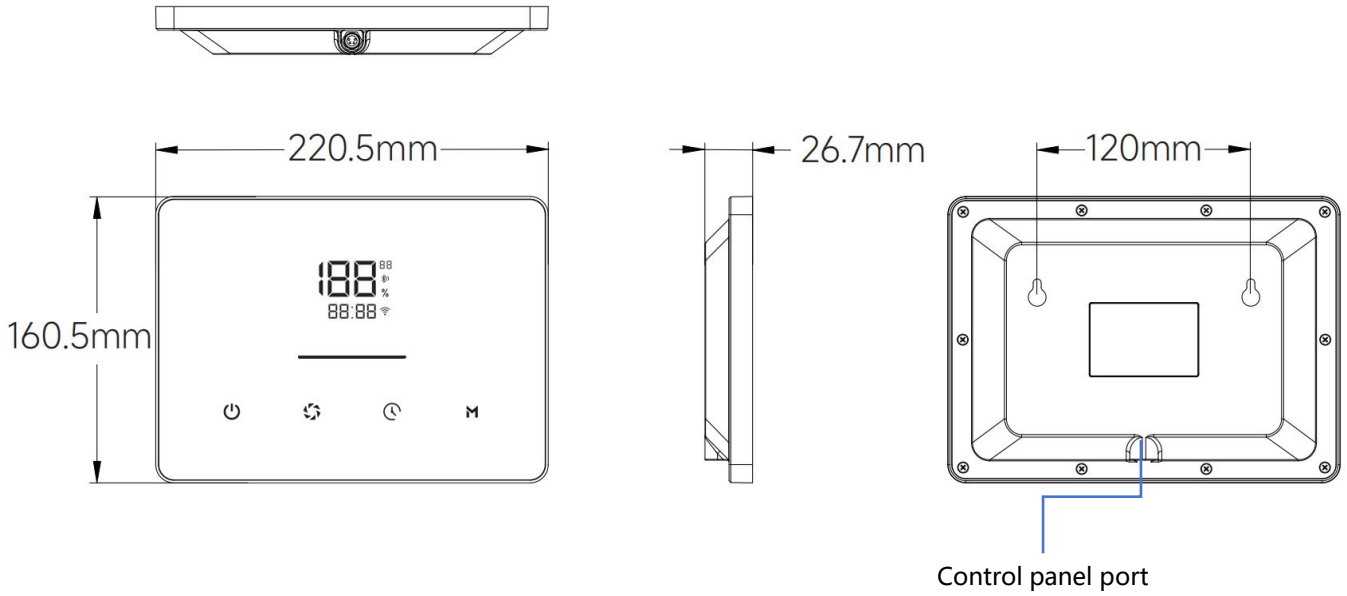

5.5 Precautions for installing the power box and control panel :

⚠ DANGER: Ensure that the power box and control panel is turned off before installation to avoid injury from accidental startup;

Installation environment:

• The control panel installation should comply with Zone 2 safety area requirements.

• The power box (IP45) and control panel (IP65) should be located in a well-ventilated, dry, non-condensing area, protected from the direct effects of rain and pool splash.

• Cable entry holes should face downwards to ensure waterproofing.

• Make sure the control panel and power box are connected correctly to ensure the normal operation of the Swim Jet. If you only complete the power box connection part without connecting the control panel in place, the Swim Jet will not start and operate properly.

• To ensure adequate heat dissipation, keep a space of at least 30 cm around the power box and control panel.

6. Swim Jet Installation Process

6.1 Installation Instructions for Housing Based on Pool Materials and Wall Thicknesses

The Swim Jet can be installed in pools of various materials. Different screw lengths: ⑫Hex Socket Truss Head Self-Tapping Screws are used for housing installation depending on the pool wall thickness. Please refer to the table below for details:

Pool Material	**Pool Wall Thickness (T)**	**⑫Hex Socket Truss Head Self-Tapping Screw Specifications**
Concrete Pool	/	M6*30 mm
Stainless Steel Pool	T≤3mm	M6*30 mm
PP/PMMA	3mm < T≤8mm	M6*30 mm
	8mm < T≤15mm	M6*40 mm

6.2 Grounding installation process

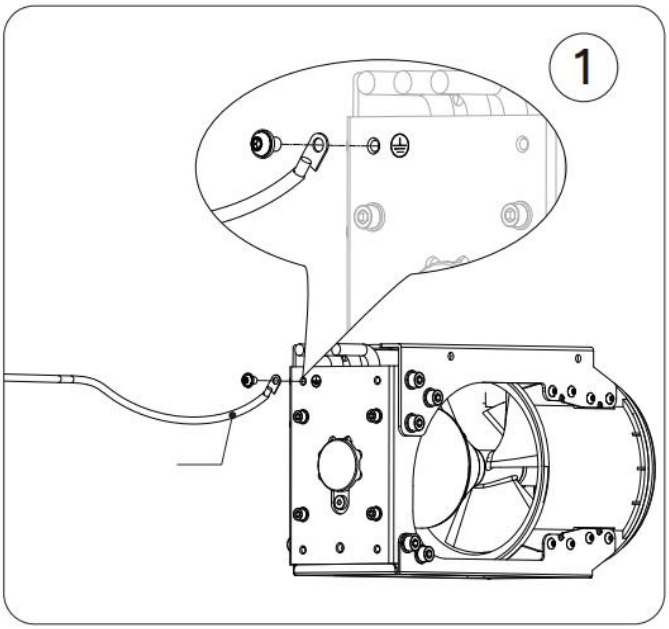

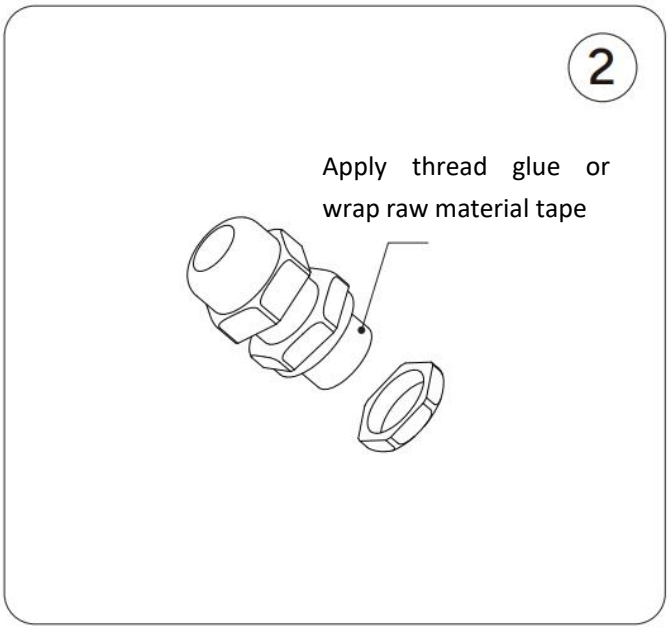

1. If there is a need for grounding, before installing the Jet into the housing, it is recommended to choose M6X10 screws with spacers and connect the ground wire to the reserved grounding position of the Jet. The diameter of the ground wire is 4-8mm.

2. Unscrew the end nut of the M12 stainless steel waterproof connector. Before screwing the waterproof connector into the housing, please apply thread glue or wrap raw material tape on the thread at the end of the connector to ensure the waterproof effect and a stable connection.

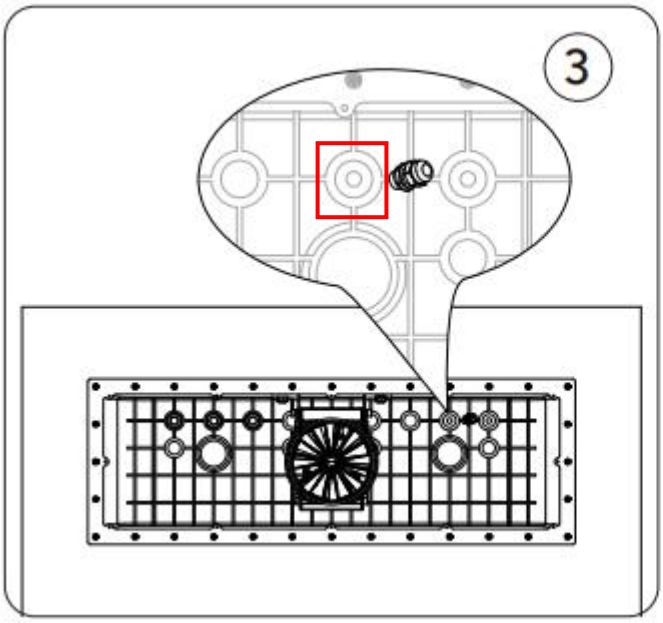

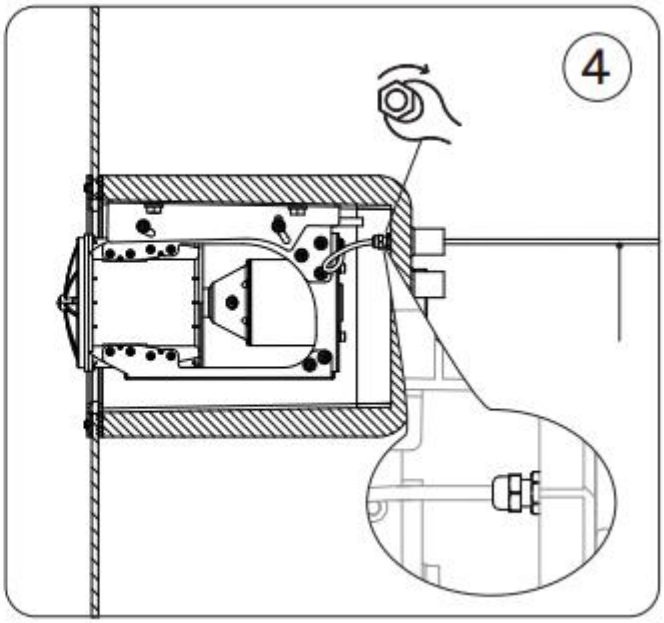

3. Use a Ø7mm drill bit to drill a through hole in the reserved interface position on the right side of the housing. After cleaning up the debris, use an adjustable wrench to tighten the M12 stainless steel waterproof connector to the housing.

4. Pass the ground wire out of the housing and use an adjustable wrench to tighten the M12 stainless steel waterproof connector.

6.3 Swim Jet Installation in Concrete Pools

6.3.1 Installation Diagrams and Requirements for the Swim Jet

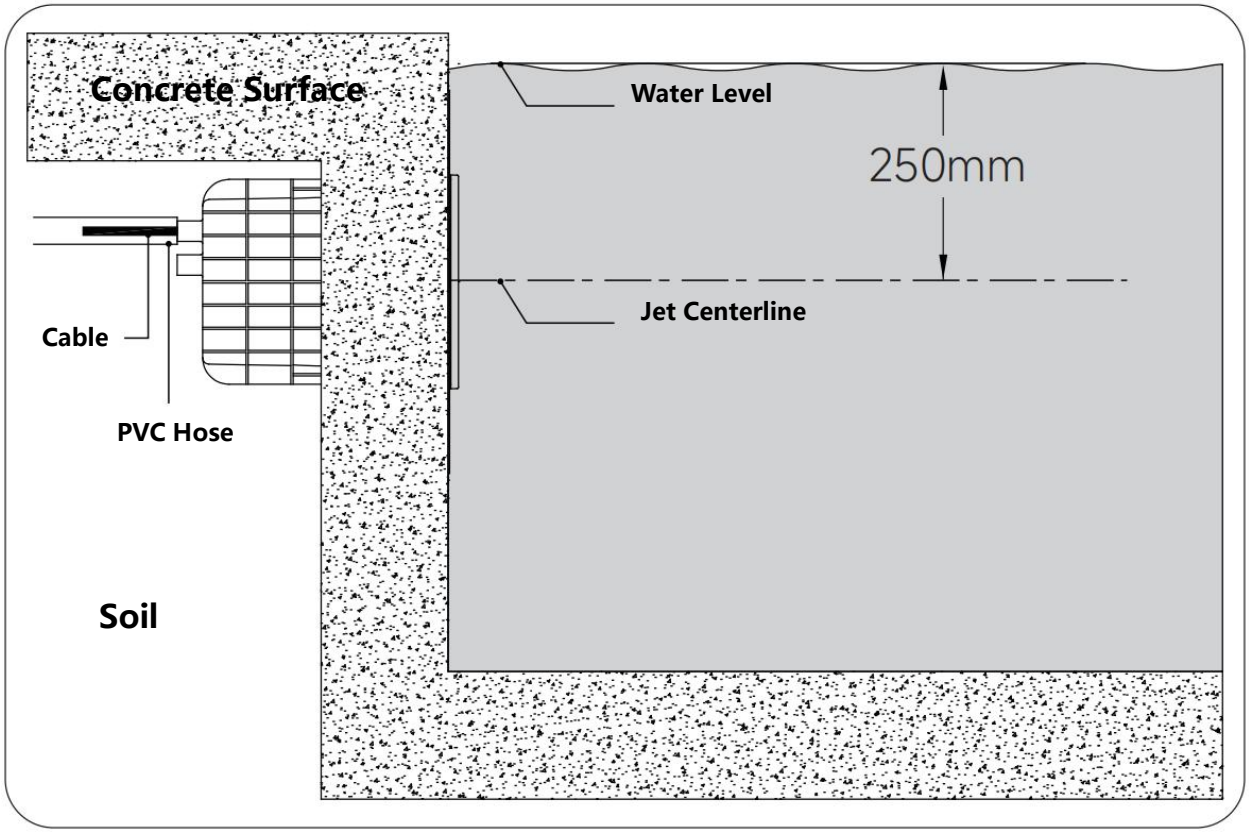

Installation Requirements (unit mm):

1.Height Positioning

When installing the Jet on the pool wall, ensure the distance from the design water level to the centerline of the Jet is maintained at 250 mm.

2.Cable Protection

The Jet cable exits from the rear of the housing and must be encased in a PVC hose for external protection.

3. Recommended exit method:

a. Reducing diameter adapter + bellows with waterproof joint: Ø25 outer diameter G1/2 internal thread PVC straight plug + M20×1.5 to AD18.5 waterproof joint + AD18.5 bellows;

b. Plug-in adapter + bellows with waterproof joint: Ø32 inner diameter G1/2 internal thread PVC socket joint + M20× 1.5 to AD18.5 waterproof joint + AD18.5 bellows;

c. Corrugated pipe straight sleeve + clamp fixation: (inner diameter Ø32) corrugated pipe straight sleeve Ø32 pipe outer wall + hand-tight hose clamp locking;

d. PVC water pipe: Ø32 inner diameter water pipe straight outlet.

4. Installation Cavity:

To accommodate the recessed installation of the Swim Jet housing, a mounting cavity measuring 1000 mm (L) x 370 mm (H) x 675 mm (D) must be pre-cast into the concrete pool structure.

5. Installation Clearance:

During concrete pouring, please reserve a 5 mm gap between the housing surface and the concrete face for the installation of the waterproof sealing gasket.

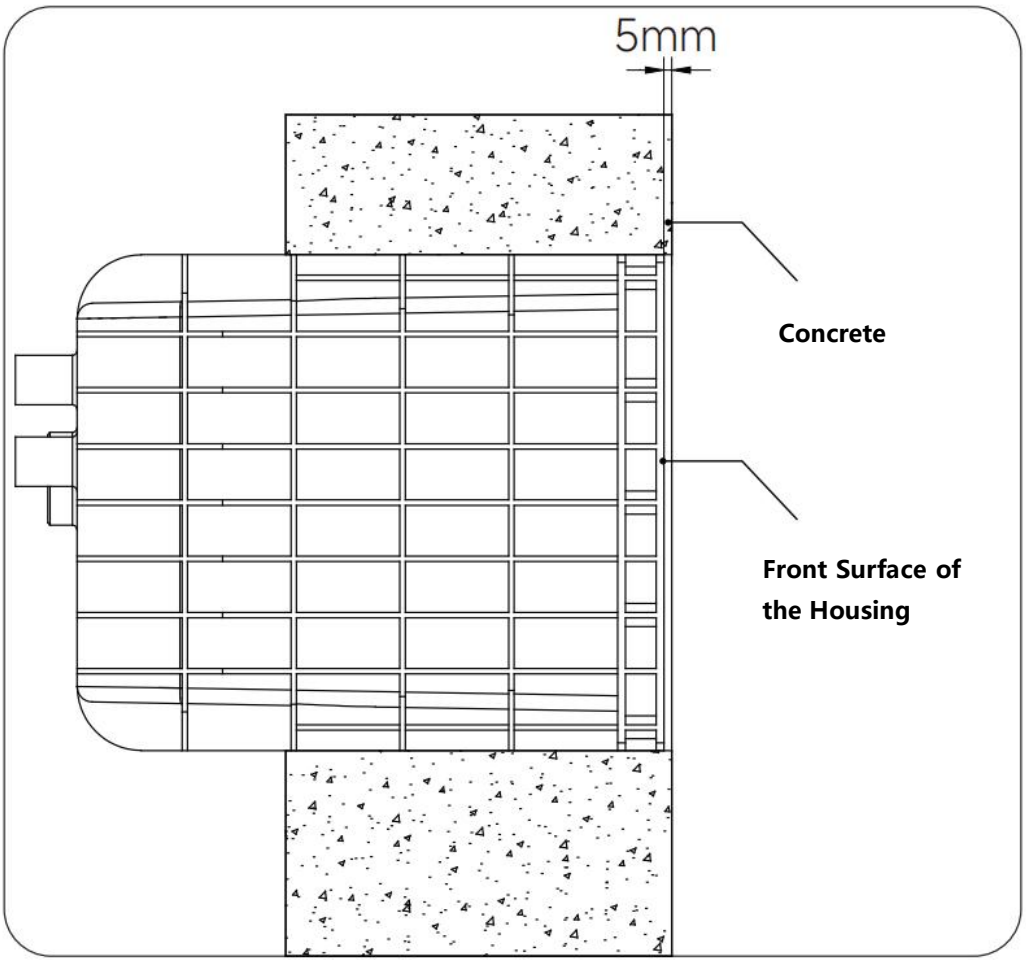

6.3.2 Use of Support Column and Protective Board

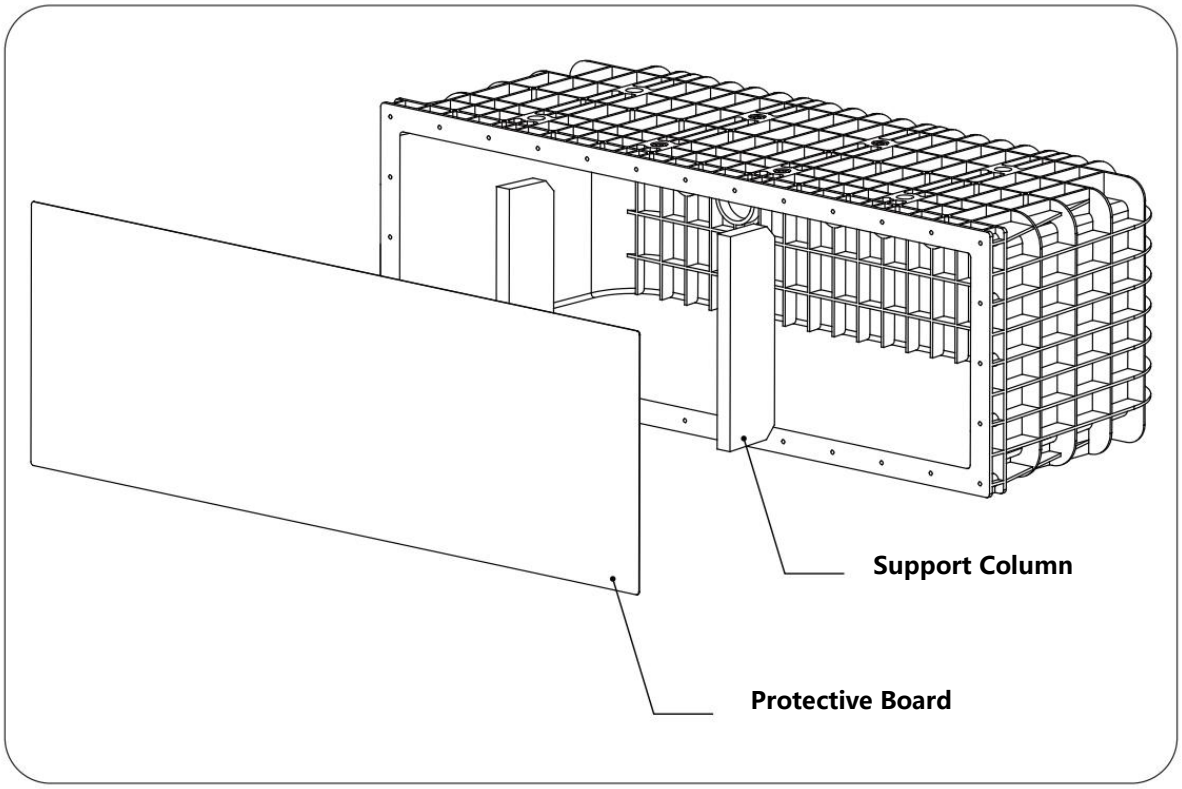

Before pouring the concrete, place two support columns inside the housing and tape the protective plate to the front of the housing. This can provide protection for the housing and keep the flange mounting surface and the inside of the housing clean and free of foreign matter.

6.3.3 Installing the Swim Jet in Concrete Pools with Pool Liner

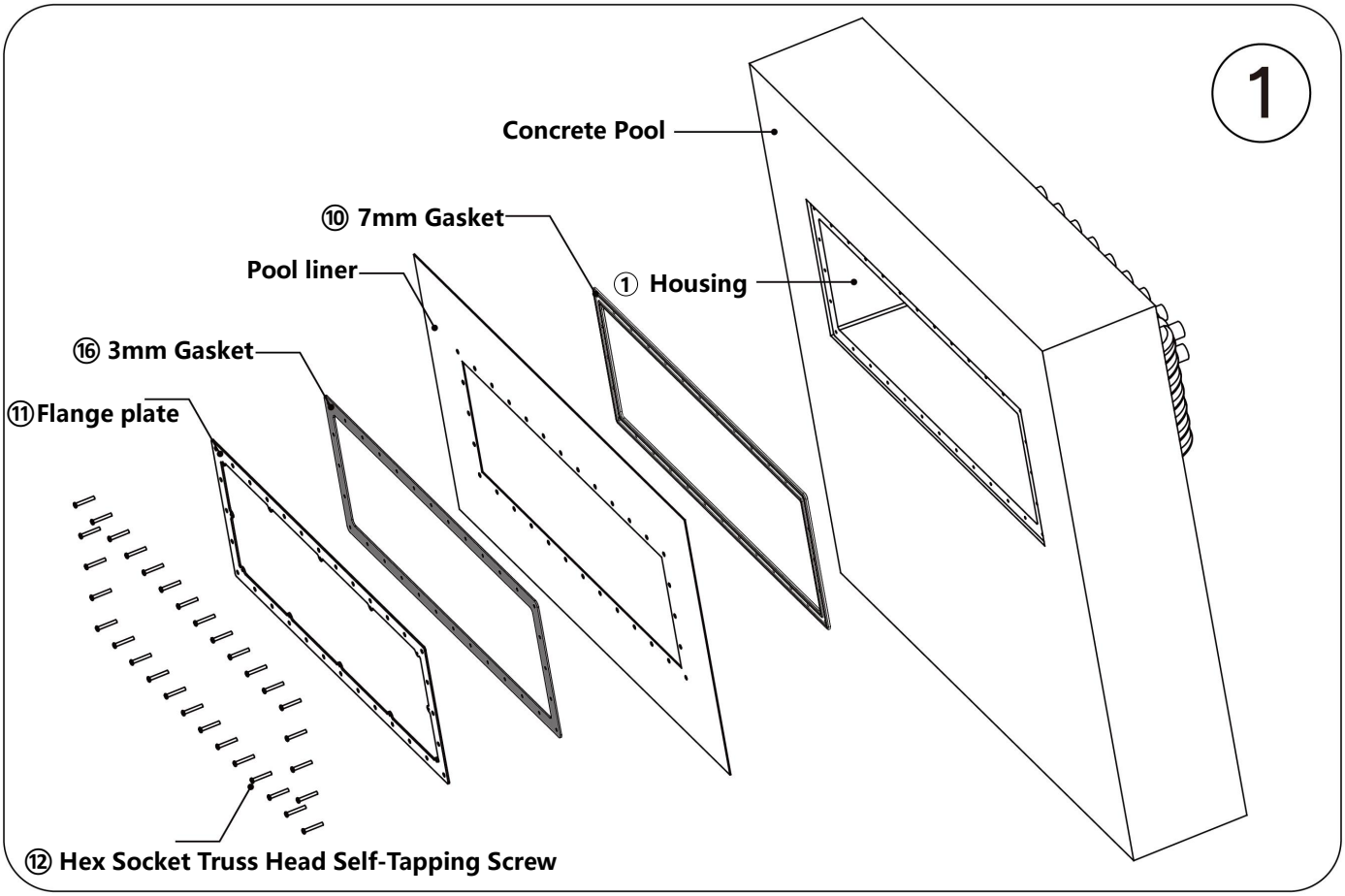

1.Install the housing into the pool

Place the housing into the pre-cast installation cavity. Following the sequence shown in the diagram, install ① Housing, ⑩ 7mm Gasket, Pool liner, ⑯ 3mm Gasket, and ⑪ Flange plate in order from right to left. Finally, fully tighten ⑫ Hex Socket Truss Head Self-Tapping Screws.

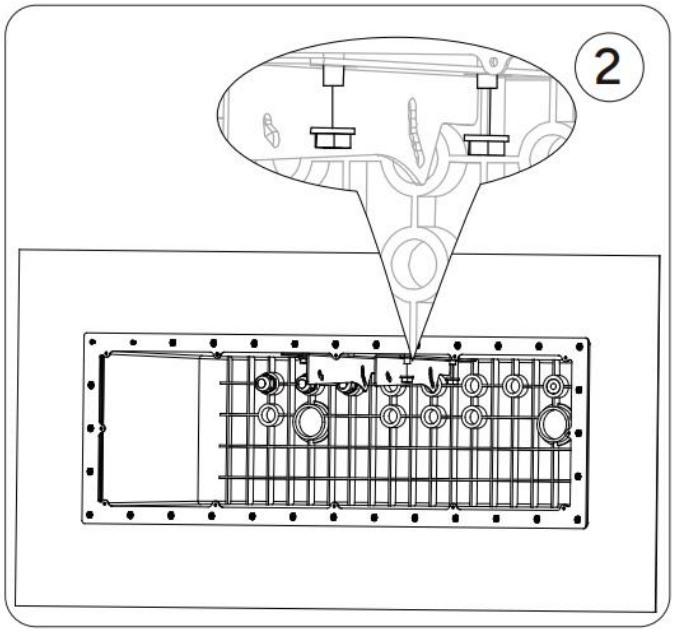

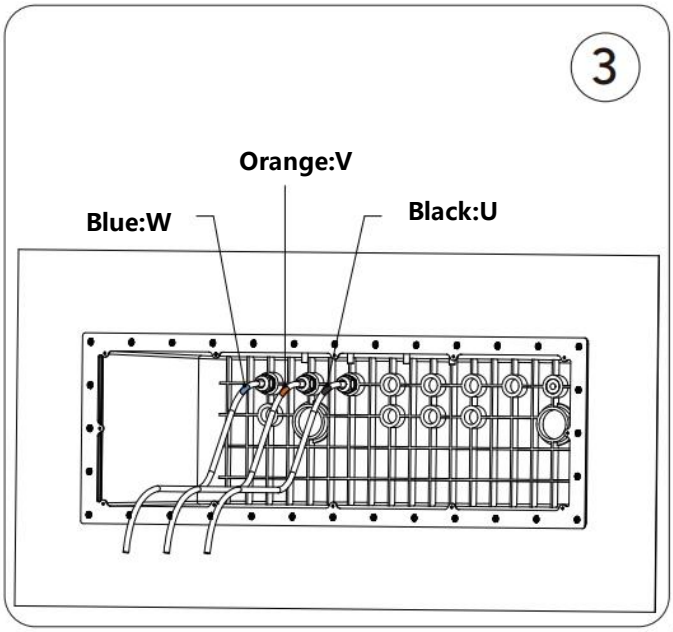

2.Installing the Left and Right Brackets to the Housing

Use four ⑥ M10 Hexagonal flange nuts to pre-secure ④⑤ left and right brackets onto ① housing. Do not fully tighten the nuts at this stage.

3.Pass the Jet cable through ③ waterproof cable connectors

Cables marked with blue (W), orange (V), and black (U) are led out from the back of ① Housing in order from left to right to prevent cable accumulation.

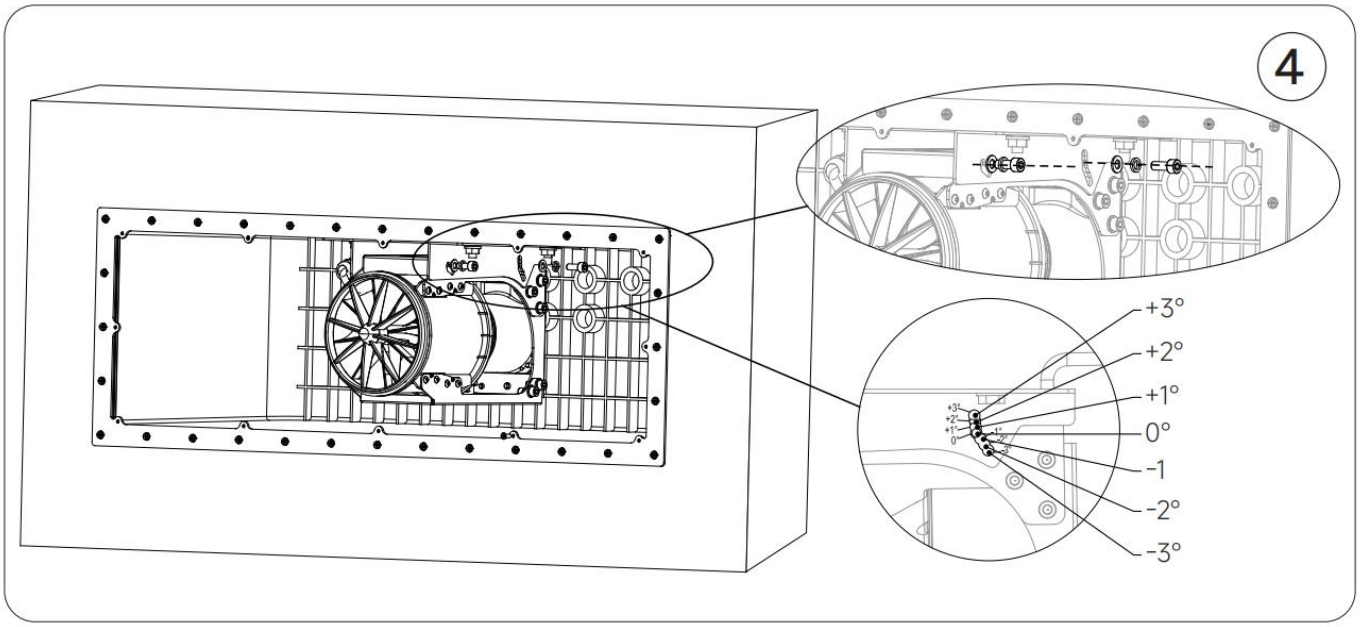

4.Securing the Jet to the Brackets

Secure ② Jet to the brackets using ⑧Spring washers, ⑨ Flat washers, and ⑦M8×20 Hexagon socket head screws. Ensure the Jet is level with the wall; do not fully tighten the screws at this stage. Use hand tools only to avoid damaging the threads.

Note: If an angle adjustment is required, re-tighten⑦M8 × 20 Hexagon socket head screws according to the positioning holes on the brackets.

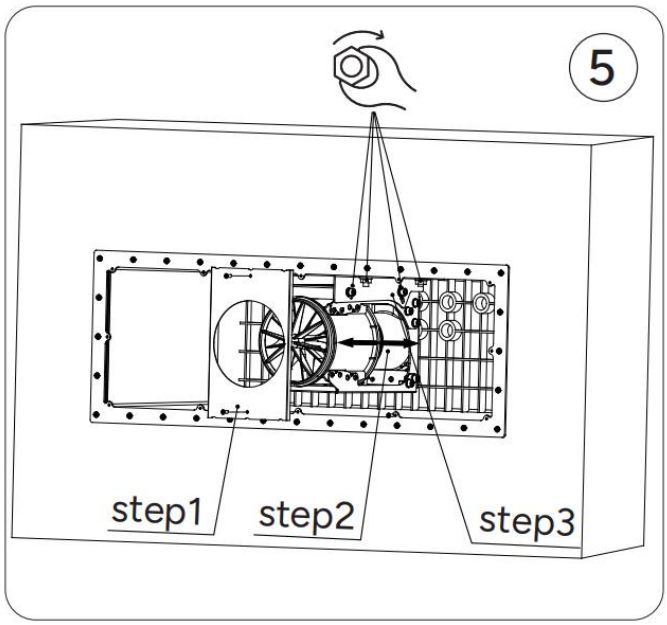

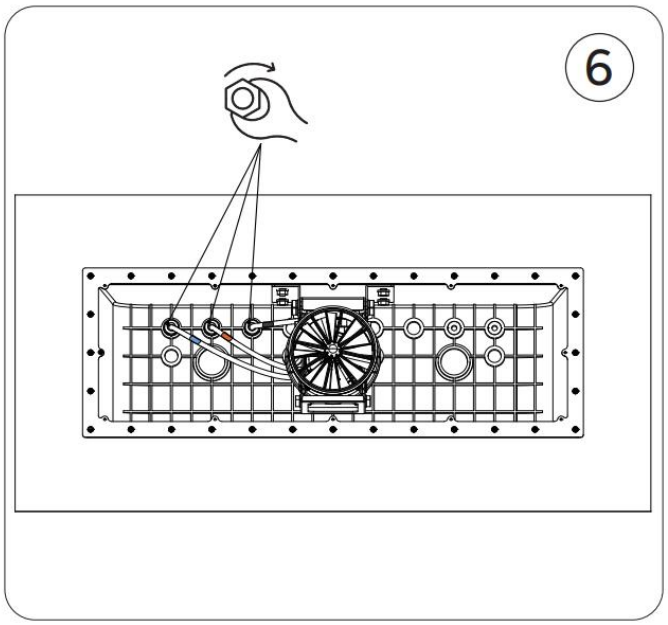

5.Adjusting and Securing the Jet Using ⑮ DX510 Horizontal recessed fixture plate

(1) Install ⑮ DX510 Horizontal recessed fixture plate using two ⑭ M5x14 Hex Socket Countersunk Head Screws.

(2) Adjust the Jet forward or backward to ensure the front end of the flow channel passes smoothly through ⑮ DX510 Horizontal recessed fixture plate and is pressed firmly against it.

(3) Secure the Jet by fully tightening ⑦ M8×20 Hexagon socket head screws and ⑥M10 Hexagonal flange nuts, then remove ⑮ DX510 Horizontal recessed fixture plate.

6.Tightening the Three ③ M20 Waterproof cable connectors

Please proceed to the next step after removing⑮ DX510 Horizontal recessed fixture plate:

Tighten the three ③ M20 Waterproof cable connectors to ensure the watertight seal of the housing.

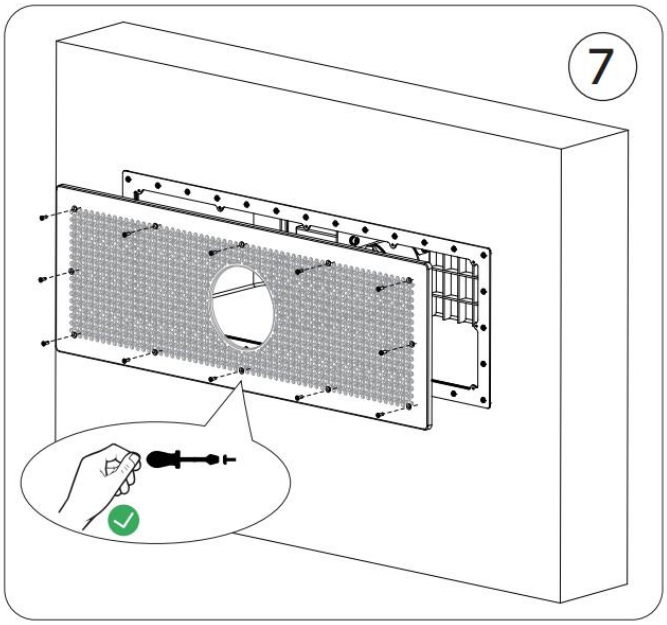

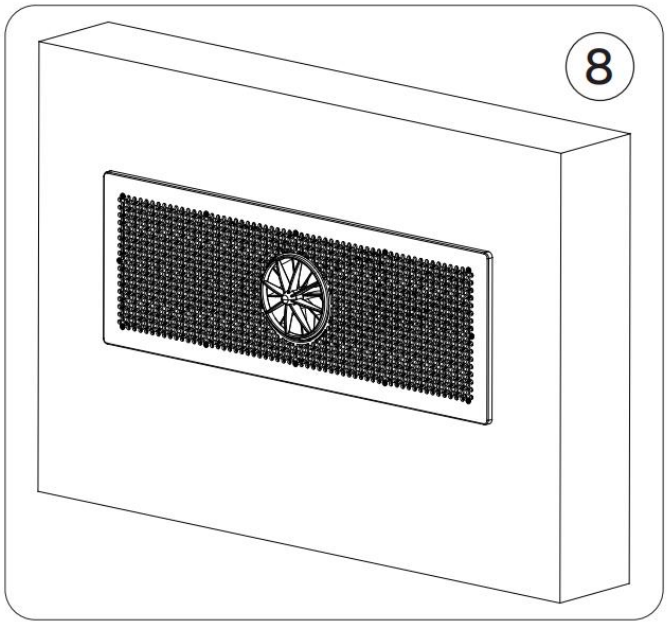

7.Installing ⑬ Front Cover

After removing ⑮ DX510 Horizontal recessed fixture plate, install ⑬ Front cover using twelve ⑭ M5x14 Hex Socket Countersunk Head Screws.

Note: To prevent thread damage, please use hand tools only; do not use power tools.

8.Final Installation Diagram of Jet

6.4 Swim Jet Installation in Prefabricated Pools

6.4.1 Cutout Template for Prefabricated Pool Walls

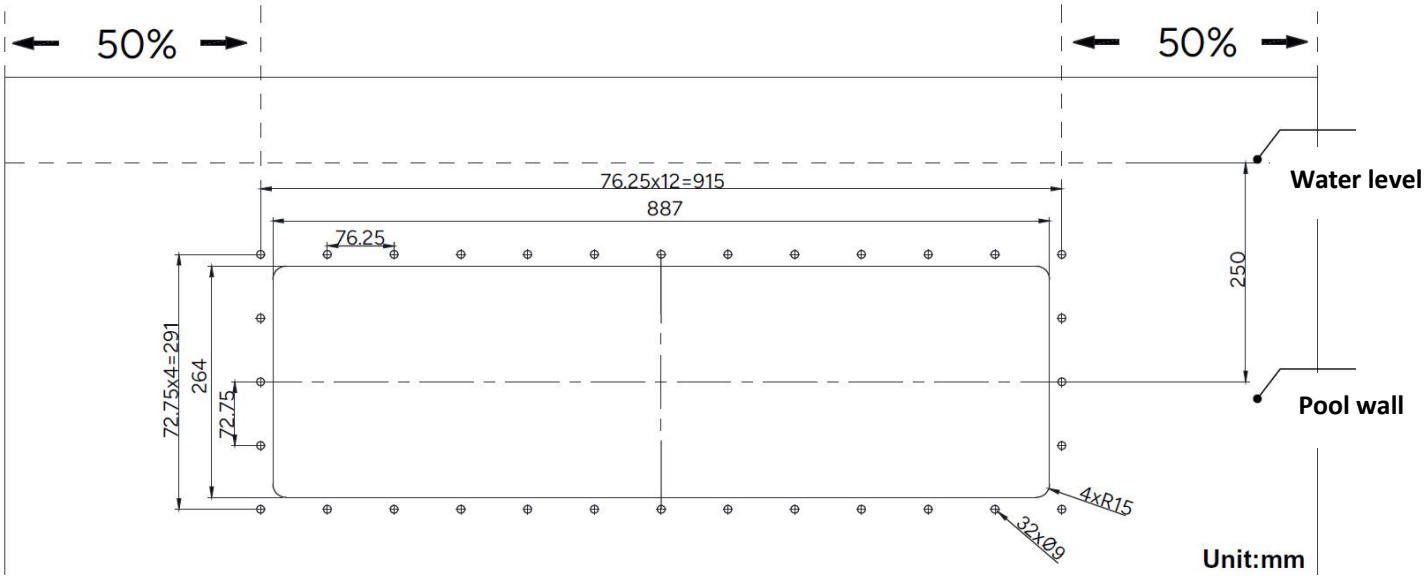

For prefabricated pools, the above openings must be reserved, ensuring the center is 250mm below the waterline.

1. Centering and Symmetrical Positioning Horizontal Alignment: The Jet must be installed at the center of the pool wall (typically the short side) to ensure the generated flow field is symmetrical.
2. Vertical Positioning and Orientation Waterline Reference: Ensure the center axis of the Jet is positioned exactly 250mm below the design waterline. (Note: Installation depth directly affects flow saturation and the risk of air ingestion).
3. Hole Cutting Specifications Dimensions: Rectangular opening of 887 x 264mm, with 32 evenly spaced Φ9mm through-holes around the perimeter.

Precautions for installing the Jet:

Installation location and depth requirements:

- Installation depth: 250 mm below the water level (the distance between the center of the Jet and the water surface).
- Installation location: It needs to be installed horizontally in the center of the swimming pool wall.

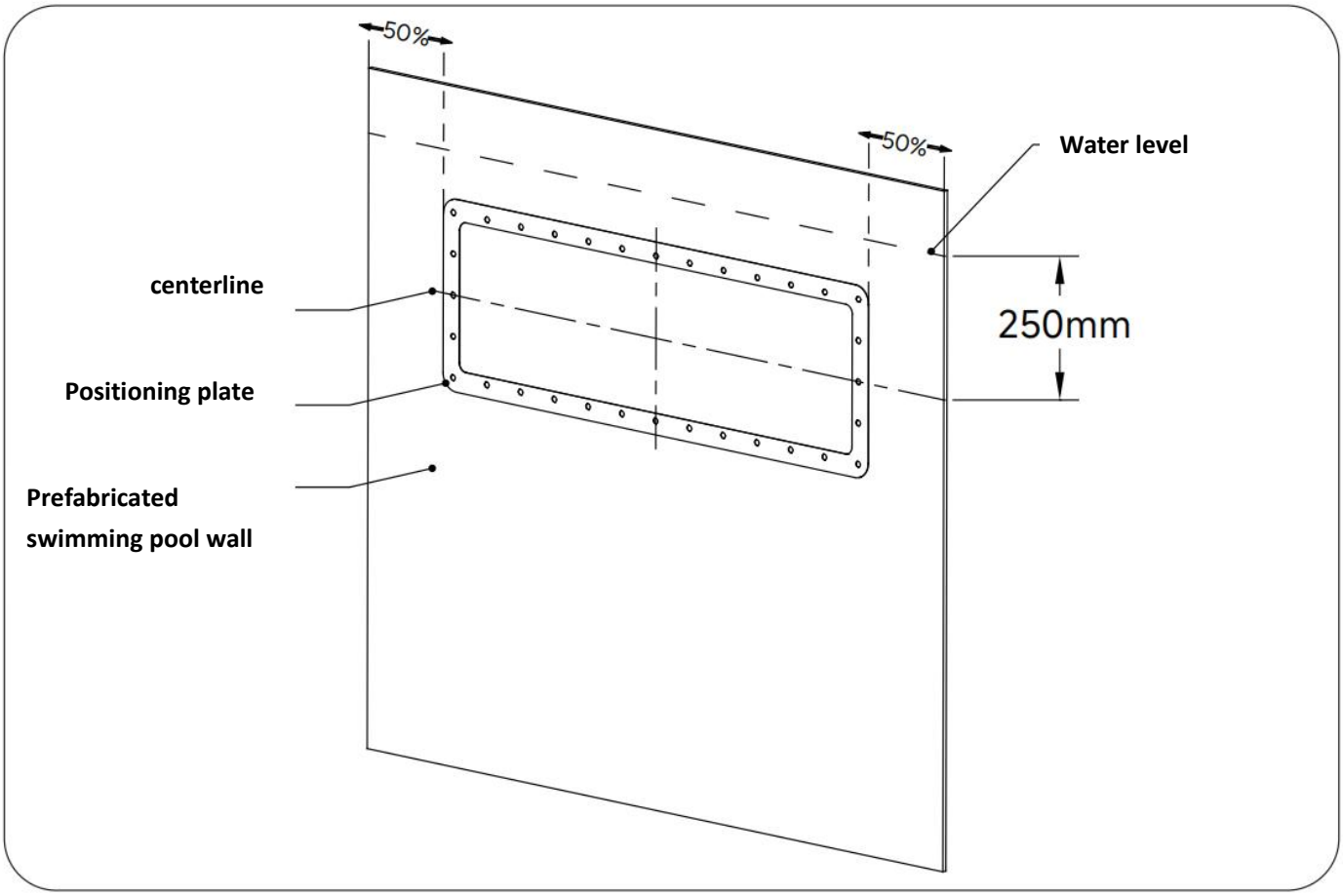

Prefabricated swimming pool opening method:

Peel off the backing of the adhesive tape on the positioning plate, then stick the plate onto the center of the designated installation area on the pool wall. Use a marker to trace the outline of the opening, then remove the positioning plate. Use a Ø9mm drill bit to drill the guide holes, and cut out the opening on the pool wall.

6.4.2 Installation Procedure for Prefabricated Pools

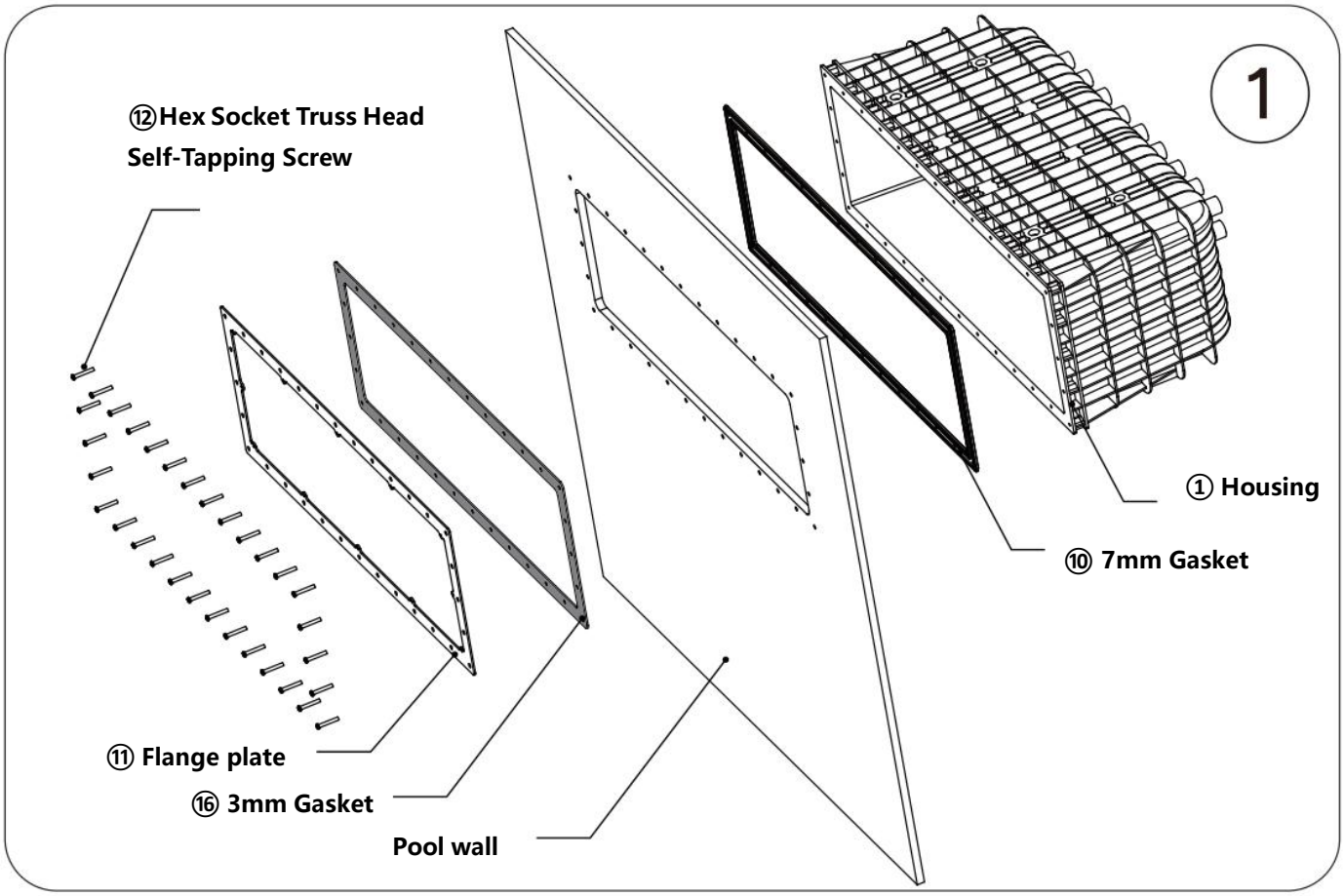

1. Installing the Housing to the Pool

Place the housing into the pre-cut installation opening. Following the sequence shown in the diagram, assemble ① Housing, ⑩ 7mm Gasket, Pool wall, ⑯ 3mm Gasket, and ⑪ Flange plate from right to left. Secure the assembly using the appropriate ⑫Hex Socket Truss Head Self-Tapping Screws based on the thickness of the pool wall.

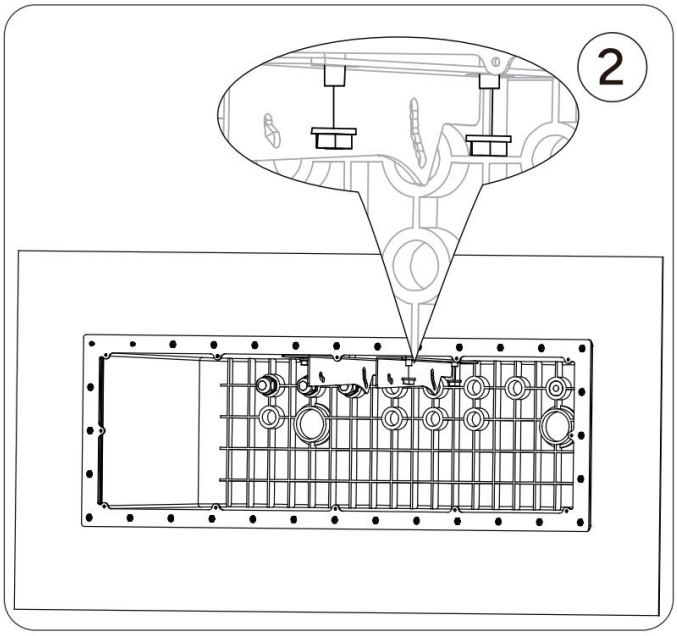

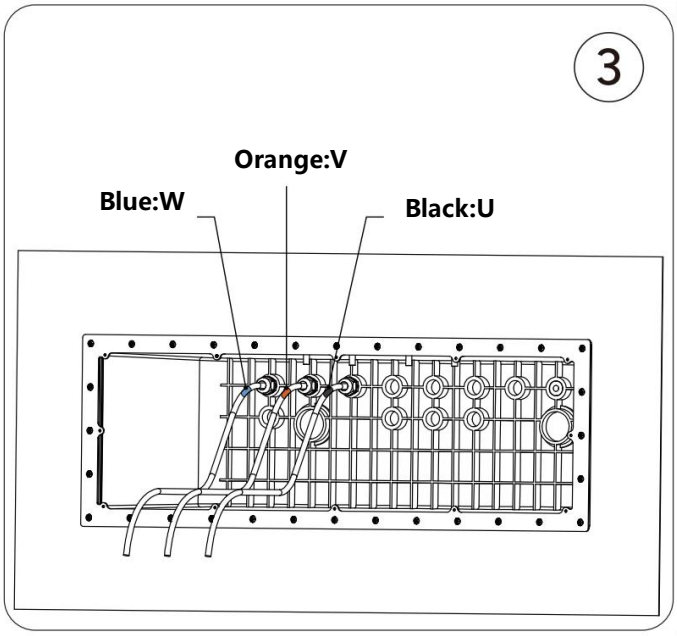

2.Installing the Left and Right Brackets to the Housing

Use four ⑥ M10 Hexagonal flange nuts to pre-secure ④⑤ left and right brackets onto ① housing. Do not fully tighten the nuts at this stage.

3.Pass the Jet cable through ③ waterproof cable connectors

Cables marked with blue (W), orange (V), and black (U) are led out from the back of ① Housing in order from left to right to prevent cable accumulation.

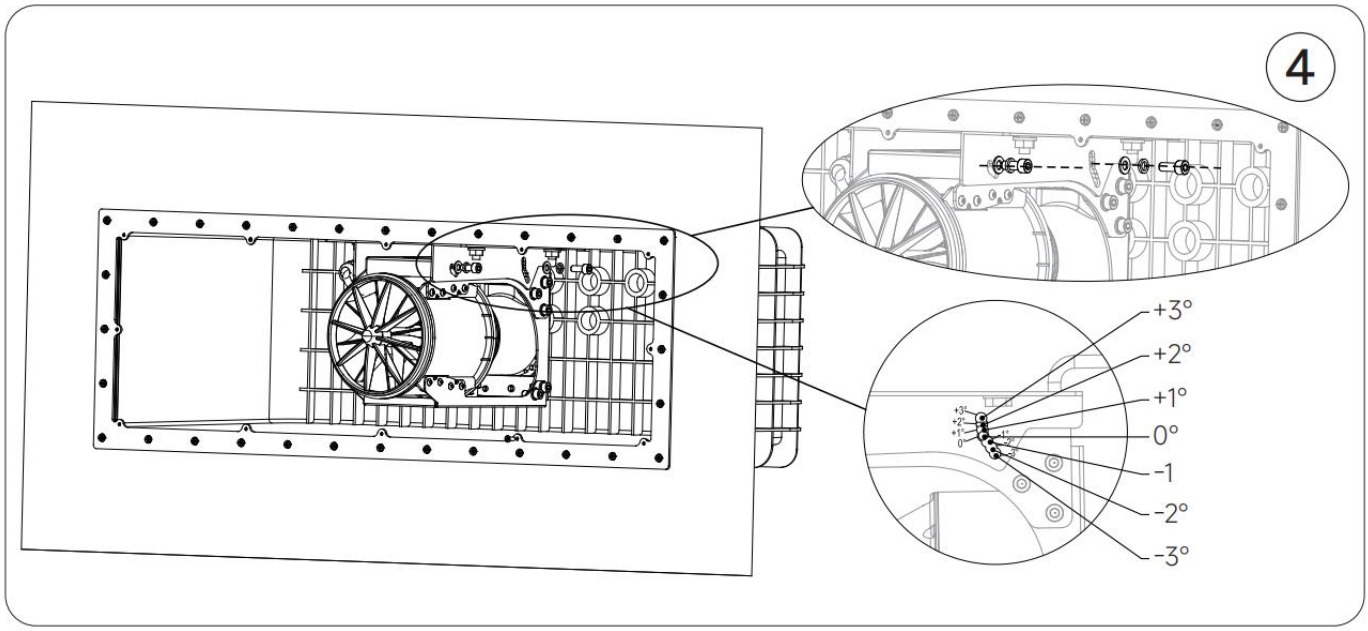

4.Securing the Jet to the Brackets

Secure ② Jet to the brackets using ⑧Spring washers, ⑨Flat washers, and ⑦M8×20 Hexagon socket head screws. Ensure the Jet is level with the wall; do not fully tighten the screws at this stage. Use hand tools only to avoid damaging the threads.

Note: If an angle adjustment is required, re-tighten⑦M8 × 20 Hexagon socket head screws according to the positioning holes on the brackets.

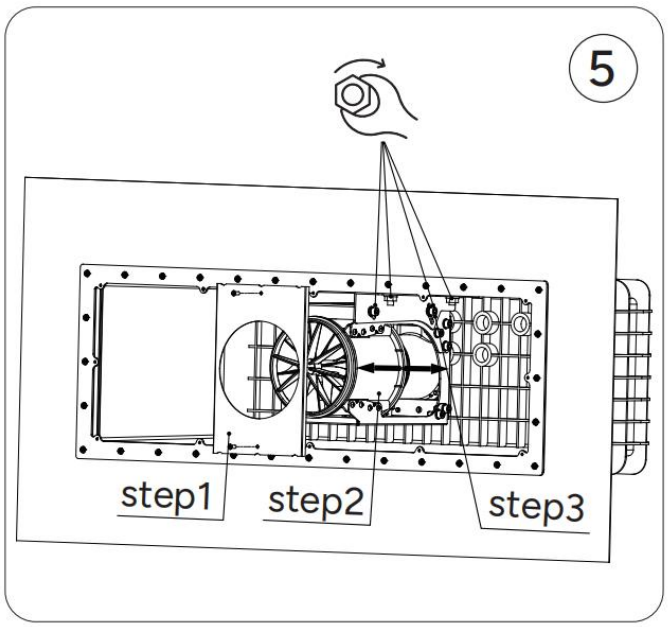

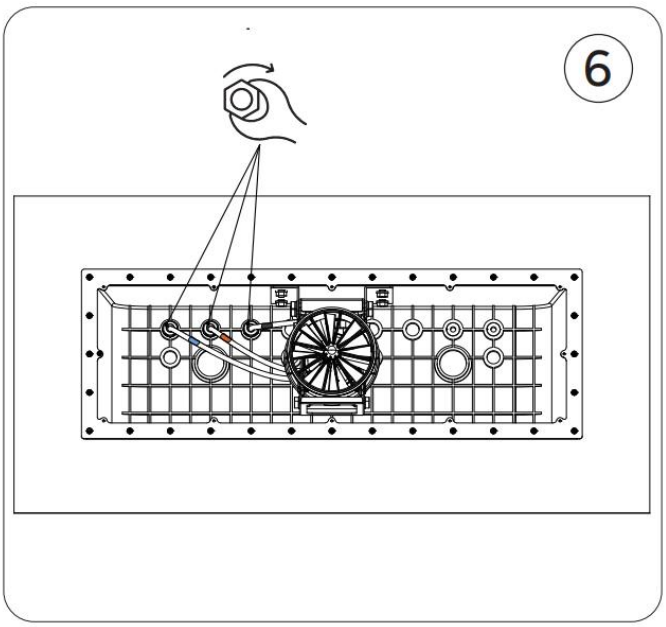

5.Adjusting and Securing the Jet Using ⑮ DX510 Horizontal recessed fixture plate

(1) Install ⑮ DX510 Horizontal recessed fixture plate using two ⑭ M5x14 Hex Socket Countersunk Head Screws.

(2) Adjust the Jet forward or backward to ensure the front end of the flow channel passes smoothly through ⑮ DX510 Horizontal recessed fixture plate and is pressed firmly against it.

(3) Secure the Jet by fully tightening ⑦ M8×20 Hexagon socket head screws and ⑥M10 Hexagonal flange nuts, then remove ⑮ DX510 Horizontal recessed fixture plate.

6.Tightening the Three ③ M20 Waterproof cable connectors

Please proceed to the next step after removing⑮ DX510 Horizontal recessed fixture plate:

Tighten the three ③ M20 Waterproof cable connectors to ensure the watertight seal of the housing.

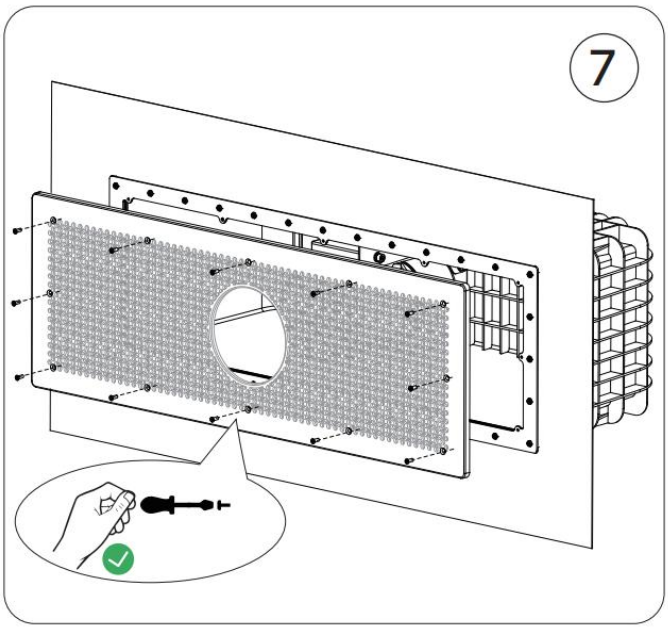

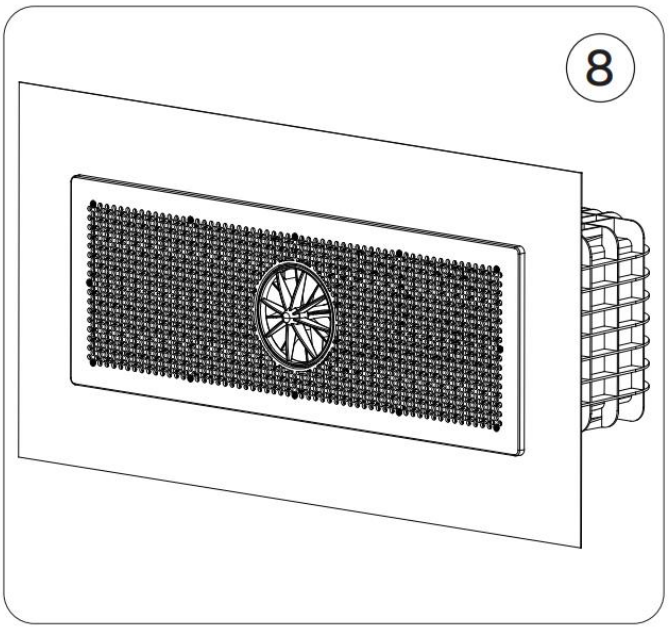

7.Installing ⑬ Front Cover

After removing ⑮ DX510 Horizontal recessed fixture plate, install ⑬ Front cover using twelve ⑭ M5 x 14 Phillips countersunk head screws.

Note: To prevent thread damage, please use hand tools only; do not use power tools.

8.Final Installation Diagram of Jet

6.5 Power Box and Control Panel Installation

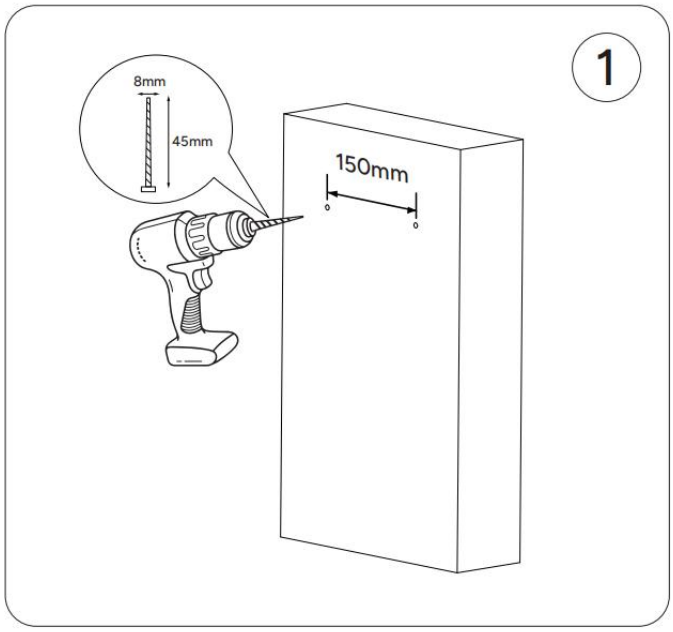

1.Drill mounting holes

(1)Drill 2 holes horizontally in the wall, 150mm apart.

(2)Recommended drill diameter 8mm, hole depth 45mm.

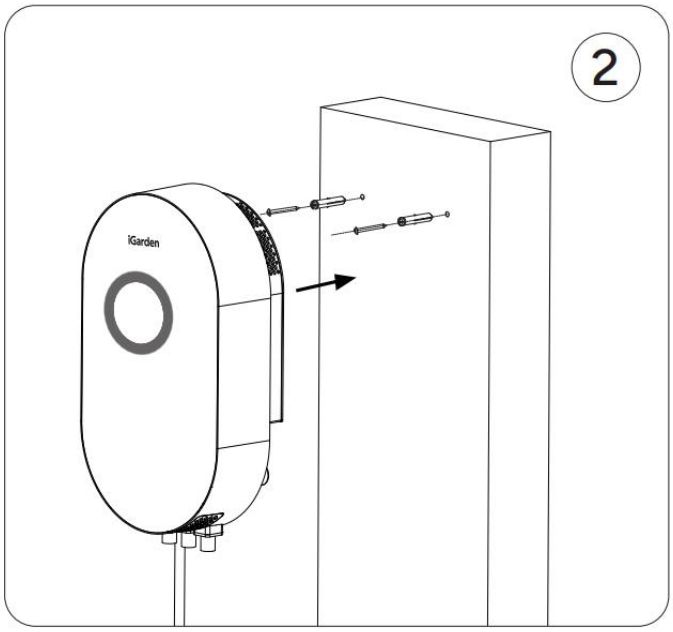

2.Fix the power box

(1) Install the Ø8*40 expansion tube and M5x40 self-tapping screw in sequence.

(2) The power box can be aligned with the holes to hang.

(3) Pay attention to the direction of installation to ensure that the cable jacks is underneath.

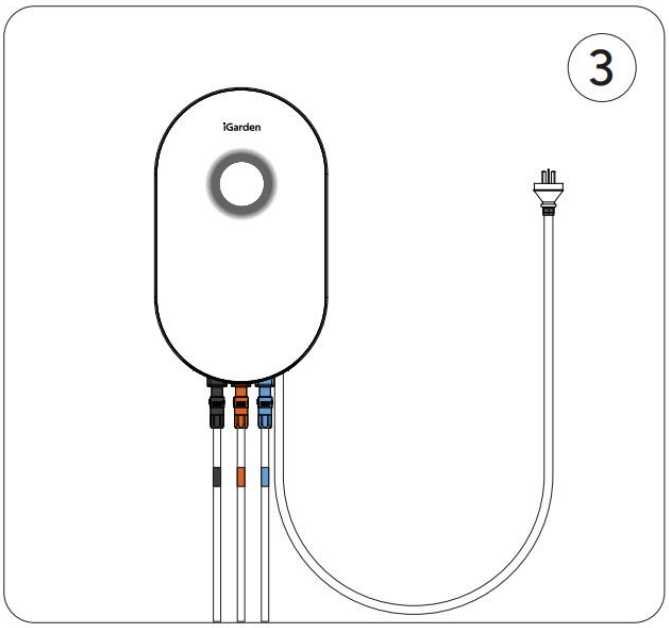

3. Connecting the Jet cables to the Power Box

Connect the Jet cables to the power box sockets by matching the corresponding colors.

The cable plug colors are: Black, Orange, and Blue.

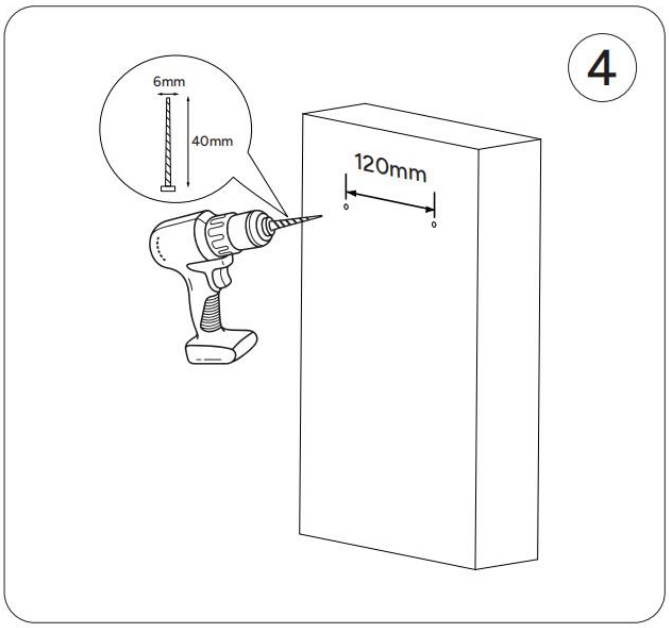

4.Drill mounting holes

(1)Drill 2 holes horizontally in the wall, 120mm apart.

(2)Recommended drill diameter 6mm, hole depth 40 mm.

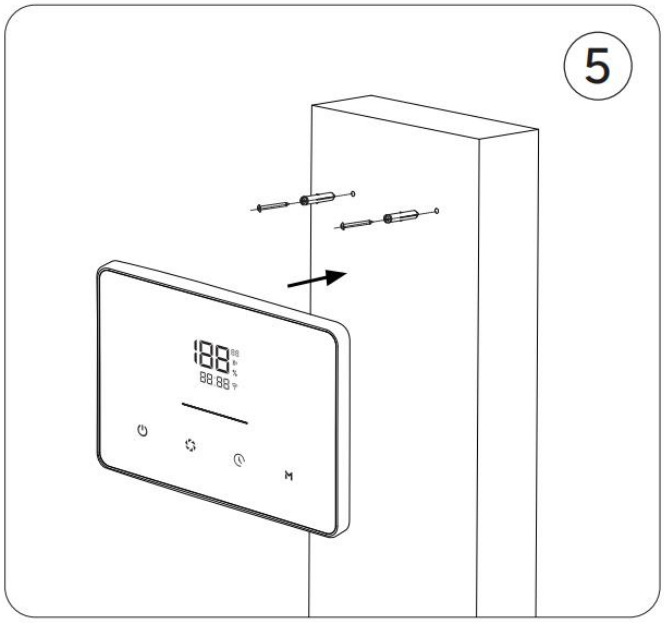

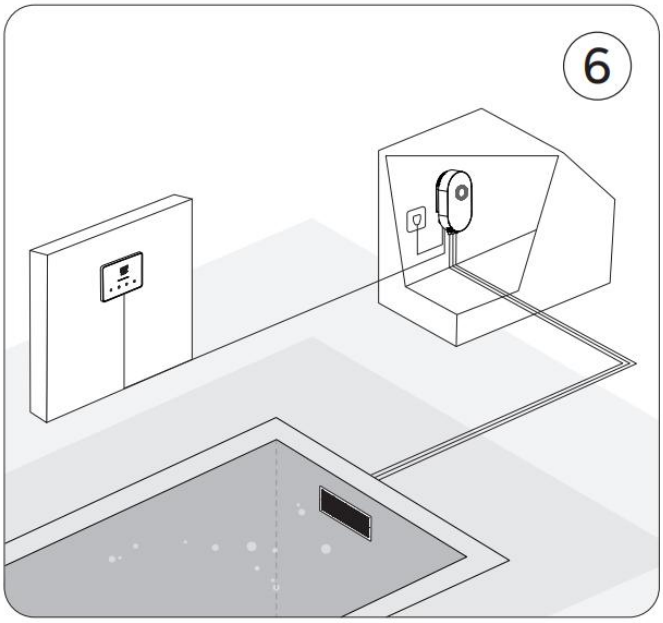

5.Fix the control panel

(1) Install the Ø6*30 expansion tube and M4x30 self-tapping screw in sequence.

(2)The control panel can be aligned with the holes to hang.

(3)Pay attention to the direction of installation to ensure that the cable jacks is underneath.

6.Swim Jet Installation Diagram

After installation is complete, please test the motor to ensure it is running in the correct direction. When viewed from the jet outlet (front), the impeller blades must rotate counter-clockwise.

6.6 Installation Guide for Direct Connect Plugs

For models without a junction box, after the Jet cables are routed through the housing holes, you must crimp the metal terminals and install the direct connect plugs. The specific procedure is as follows:

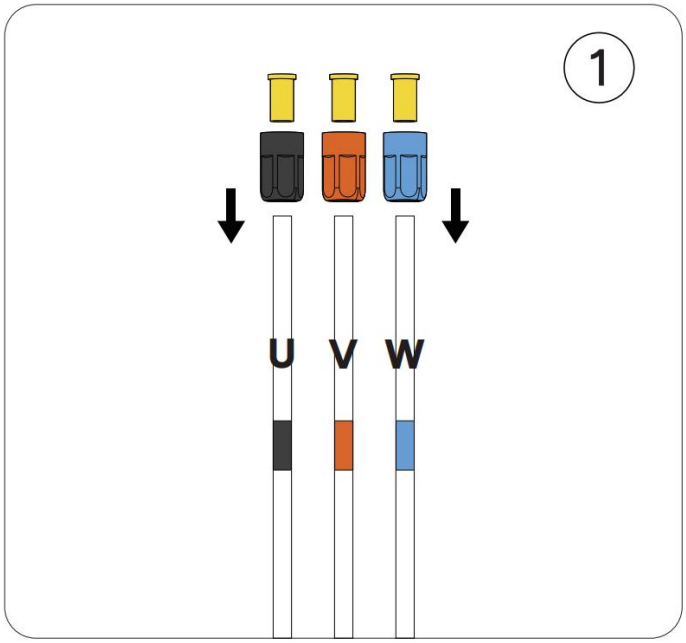

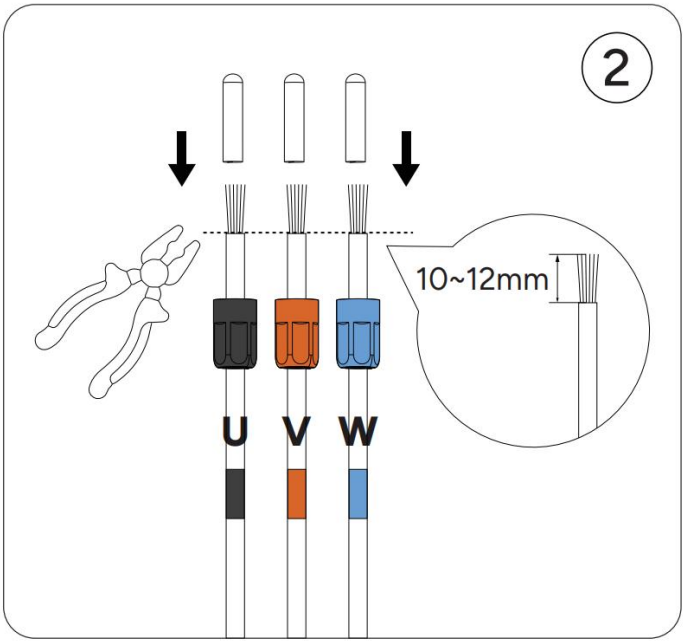

1.According to the color, pass the U wire through the black, the V wire through the orange, and the W wire through the blue corresponding locking nuts and rubber sleeve.

2.Strip the wires to expose 10~12mm, and insert the wire core into the metal terminals.

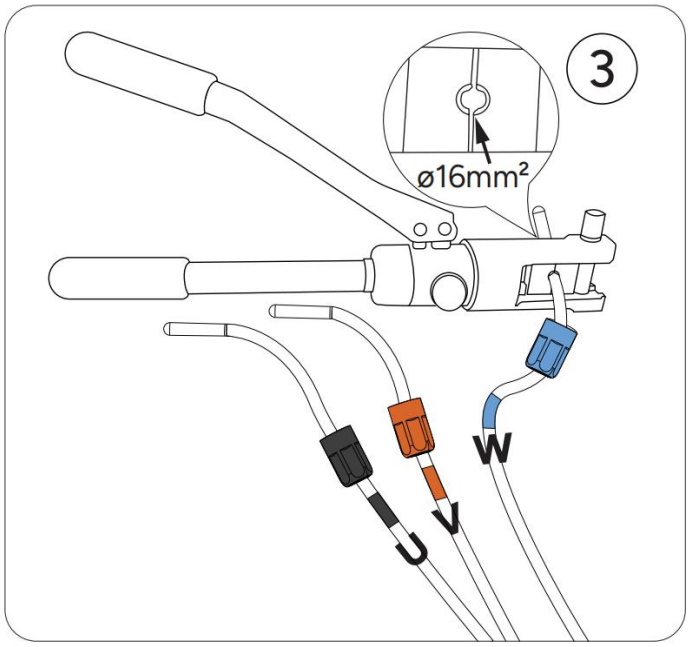

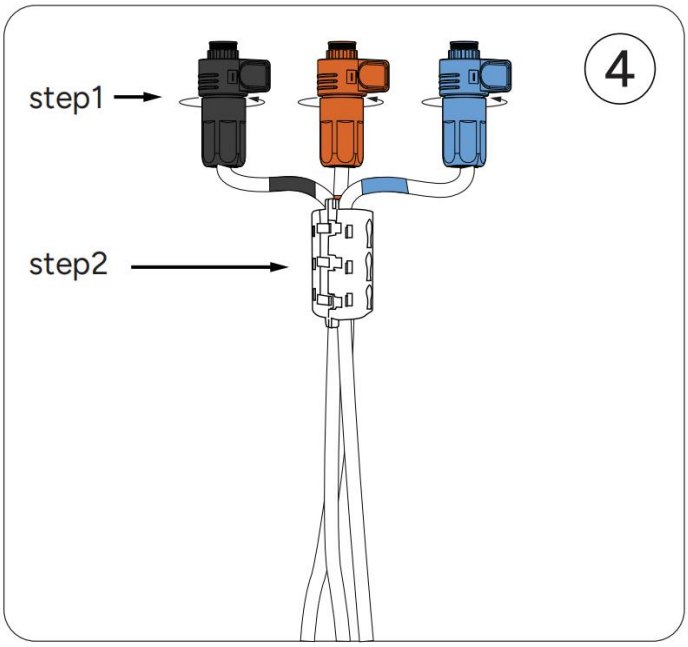

3.Use crimping pliers with a 16mm² blade press the metal terminals tightly.

4.Insert the crimped metal terminals into the direct connect plug and tighten the locking nut securely.
Place the snap-on ferrite core onto the UVW cables. Snap the core shut, ensuring the latches are fully engaged. The ferrite core must be firmly secured to the cable without any looseness.

7. Installation of Underwater Button (Optional)

7.1 Underwater Button Structure Diagram

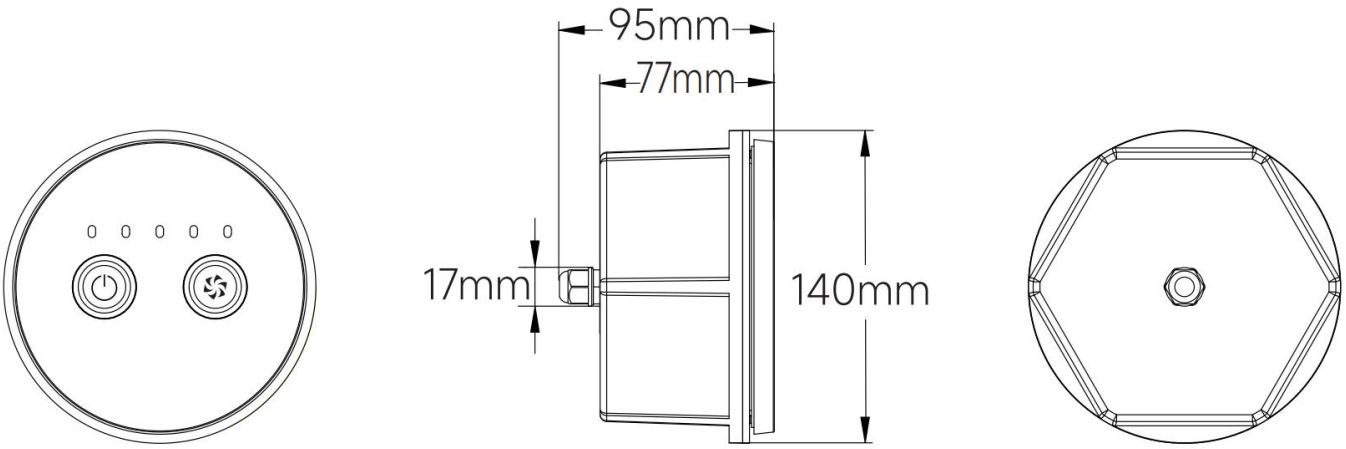

7.2 Underwater Button Configuration

SN	Description	Quantity
①	Underwater button housing ⌀140×63mm, ABS	1
②	Underwater button panel ⌀130×60mm, ABS	1
③	M12 Waterproof cable connector, 316L	1
④	Gasket ⌀138×3mm, EPDM	1
⑤	Gasket ⌀124×4.2mm, silicon rubber	1
⑥	4-Pin Aviation Connector (Female)	1
⑦	4-Pin Aviation Connector (Male)	1
⑧	M12 waterproof cable connector, nylon	1
⑨	Front cover, Duplex 2205	1

Note: ③M12 Waterproof cable connector（316L） is an included accessory of the built-in Swim Jet, and the underwater button shipped separately is not included.

7.3 Underwater Button Installation Instructions

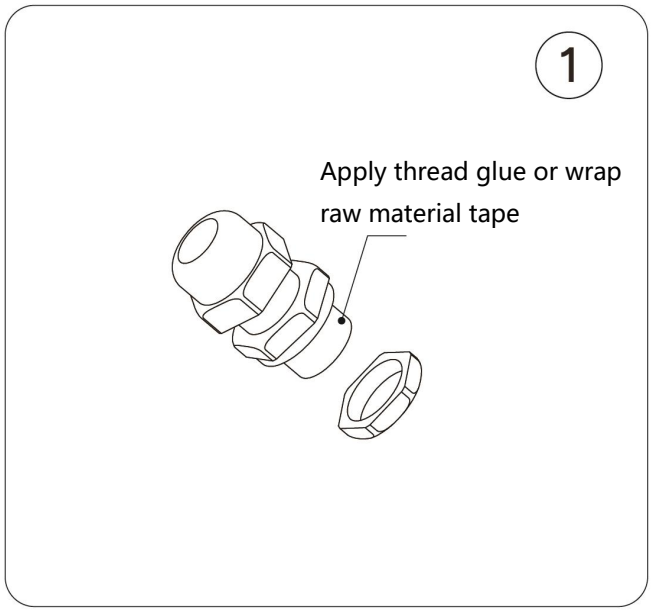

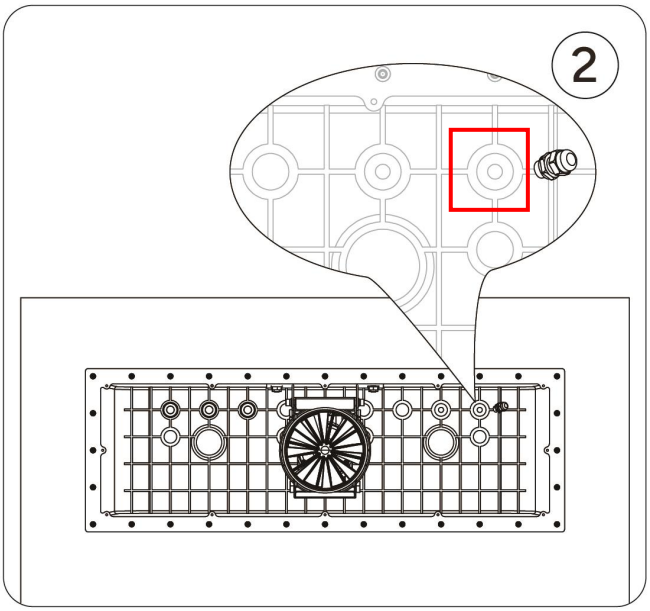

1. Unscrew the end nut of ③ M12 Waterproof cable connector (316L). Before screwing the waterproof connector into the housing, please apply thread glue or wrap raw material tape on the thread at the end of the connector to ensure the waterproof effect and a stable connection.

2. Use a Ø7mm drill bit to drill a through hole in the reserved interface position on the right side of the housing. After cleaning up the debris, use an adjustable wrench to tighten ③ M12 Waterproof cable connector (316L) to the housing.

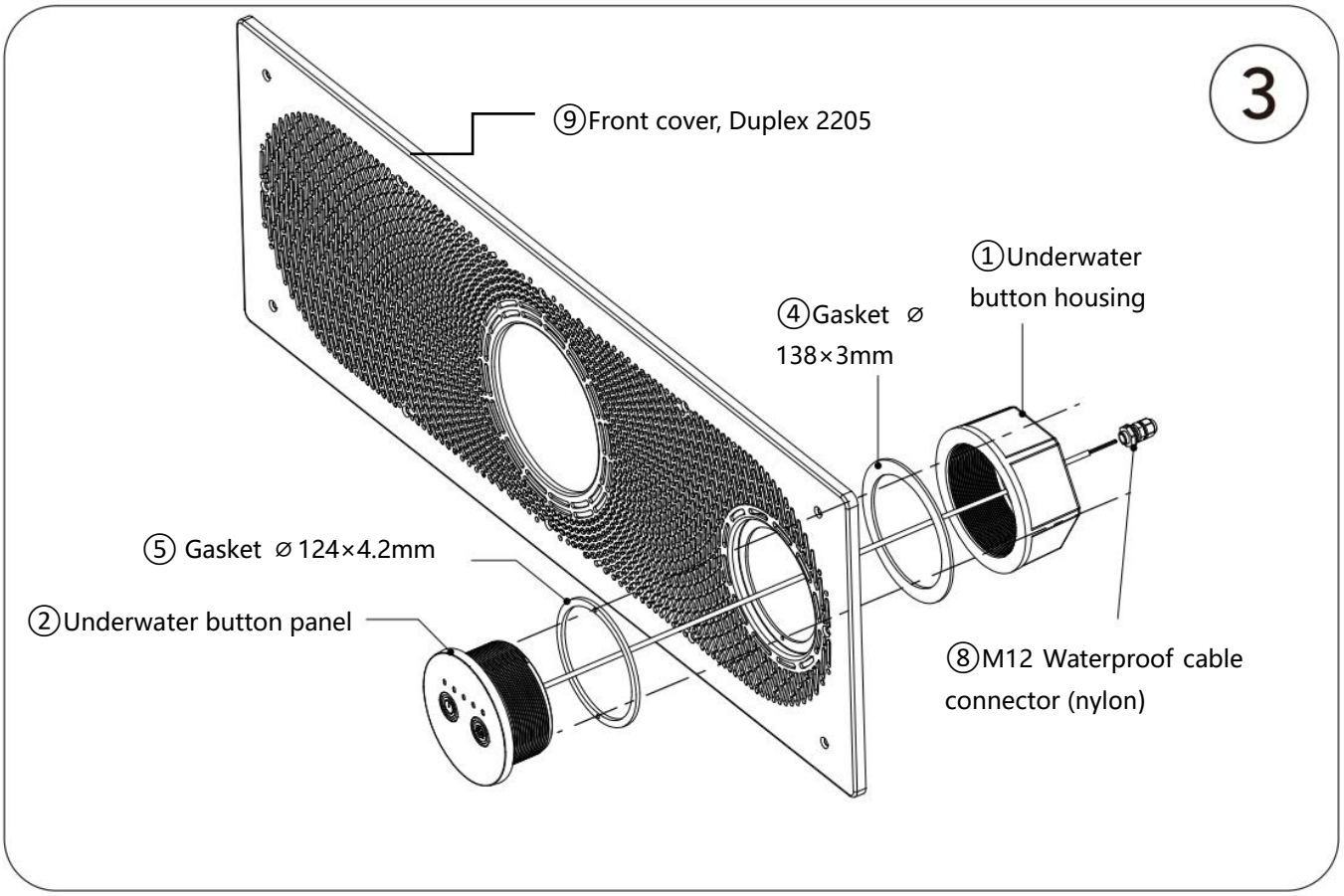

3. Align the positioning posts on the underwater button panel and gasket with the positioning holes on the front cover (Duplex 2205), and install ②Underwater button panel,⑤ Gasket ⌀ 124 × 4.2mm, ④ Gasket ⌀ 138 × 3mm, ① underwater button housing, and ⑧ M12 waterproof cable connector (nylon) in the order shown.

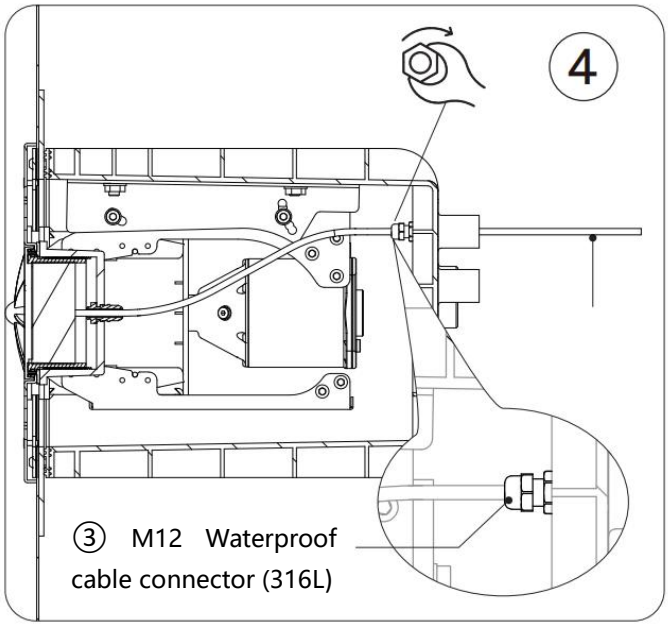

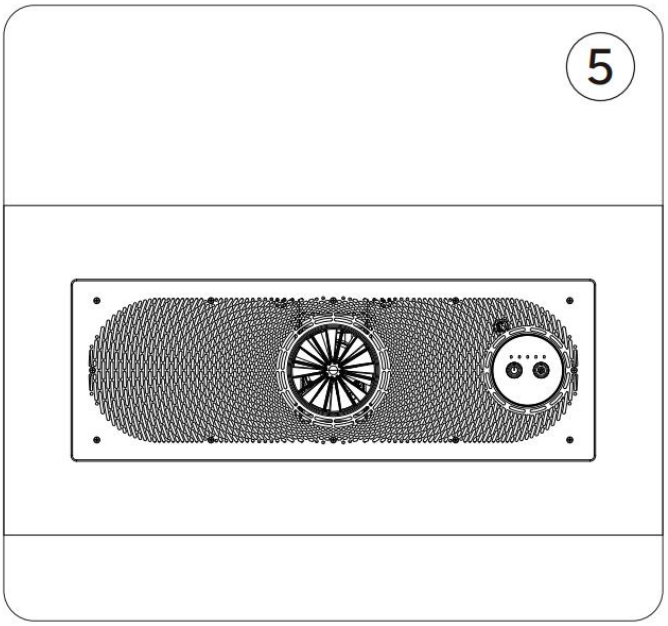

4. Pass the underwater button control cable through the M12 waterproof connector. To prevent the cable from being entangled when the host is running, please pull the cable limiter to the waterproof connector and tighten ③ waterproof cable connector (316L) with an adjustable wrench.

5. Schematic diagram of installation completion.

7.4 Underwater button wiring instructions

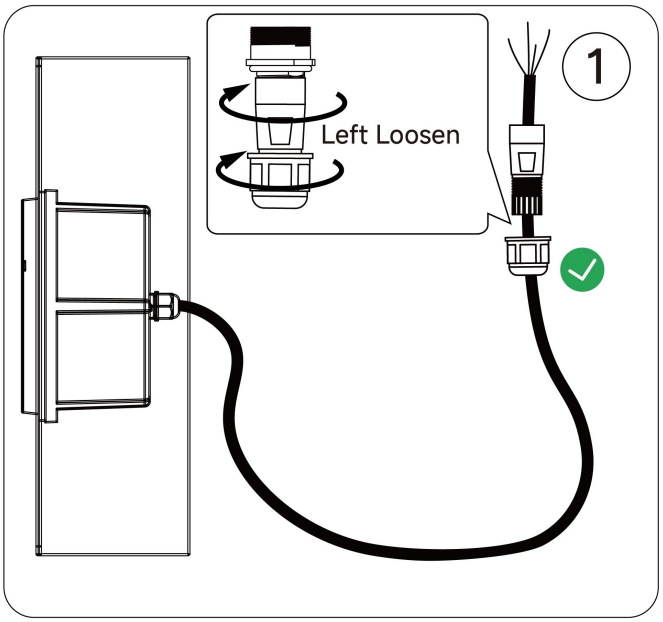

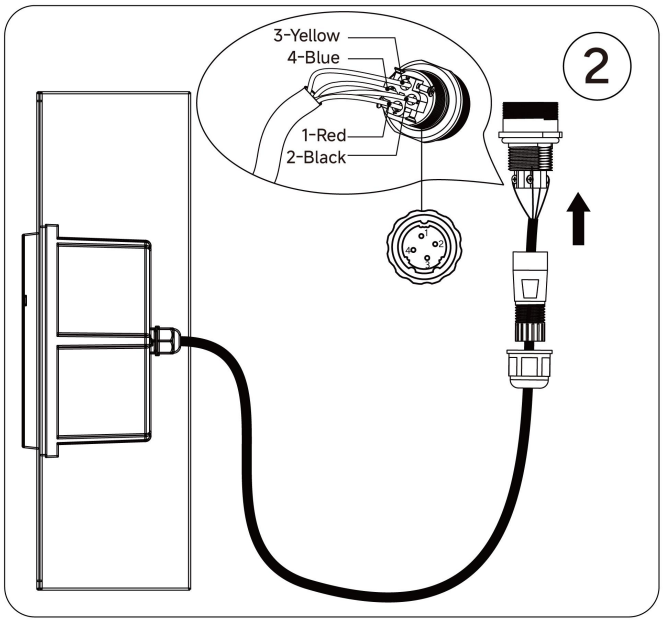

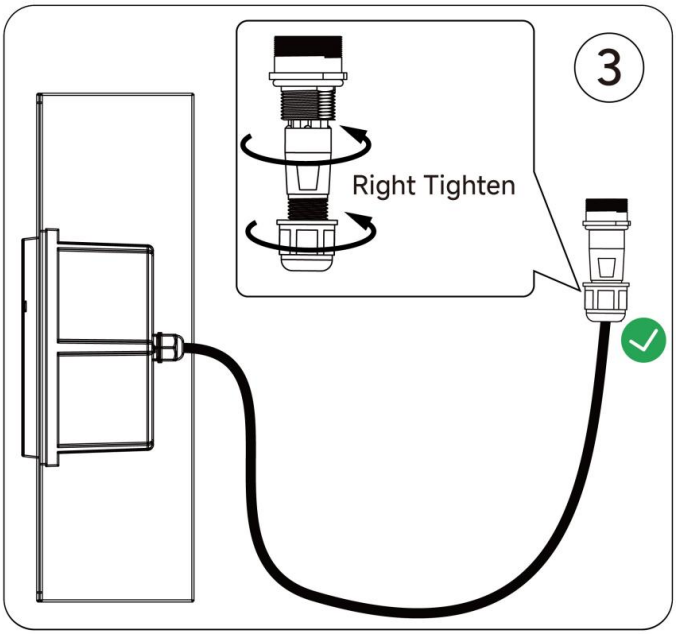

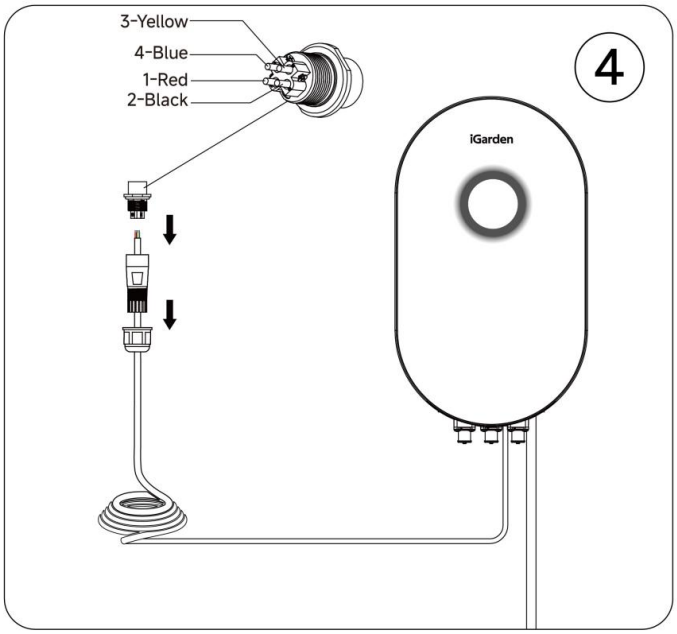

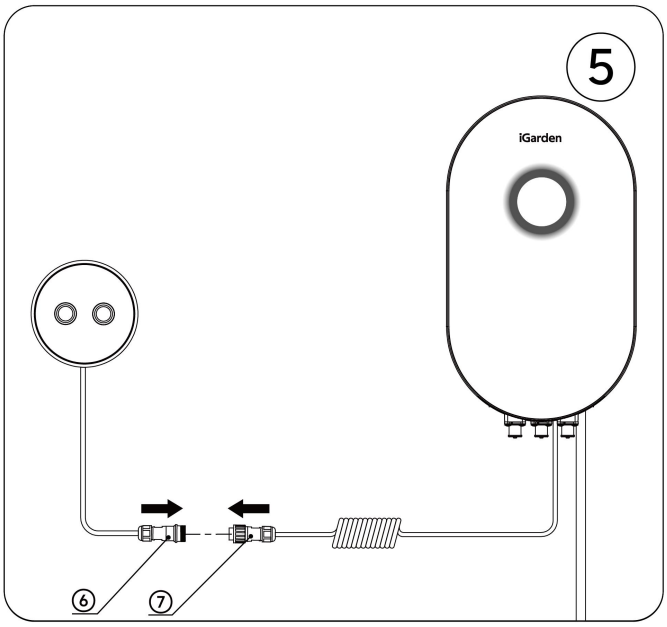

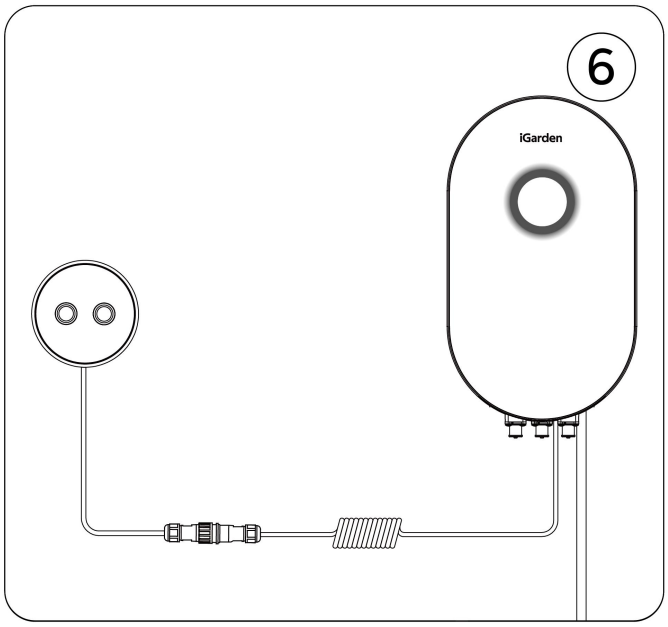

Disassemble the tail nut of the four-core aviation connector in the accessory, pass the underwater switch cable through the tail nut of the aviation connector, insert the four-core aviation connector according to the specified line sequence and lock it with screws, tighten the tail nut of the aviation connector, and fix the cable.

8. How to Use Swim Jet

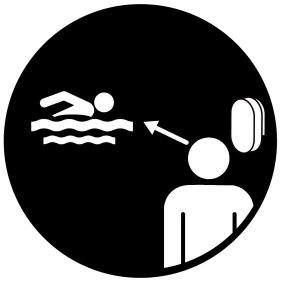

8.1 Check Before Usage

a. Check the power supply and connections;

- Make sure the power is off.
- Check the cables: check that all cables are connected correctly and are not damaged or worn, if damage occurs, do not use the product and contact the agent for repair.

b. Check the Jet and pool condition

- Make sure the Jet is fully submerged.
- Clear obstacles: check that there are no obstacles in the pool, especially near the Jet, to ensure that there is no interference with the operation of the Jet.

c. Safety check

- Earth leakage protection: Confirm that the residual current device (RCD) is working properly.
- Wear a swimming cap and goggles.

d. Operation preparation

- Operation check：Before start-up, make sure there is no one near the Jet; Monitor the device continuously during startup.
- Control panel：Check the control panel to see if there is any damage or loose cables .

e. Usage tips:

- ⚠ DANGER: Do not plug or unplug the power plug with wet hands to prevent electric shock.
- Keep safe distance: Maintain a safe distance of at least 50 cm from the Jet during operation.

f. After confirming the above safety, the user can power on the power operation

8.2 Control Panel Touch Button Description

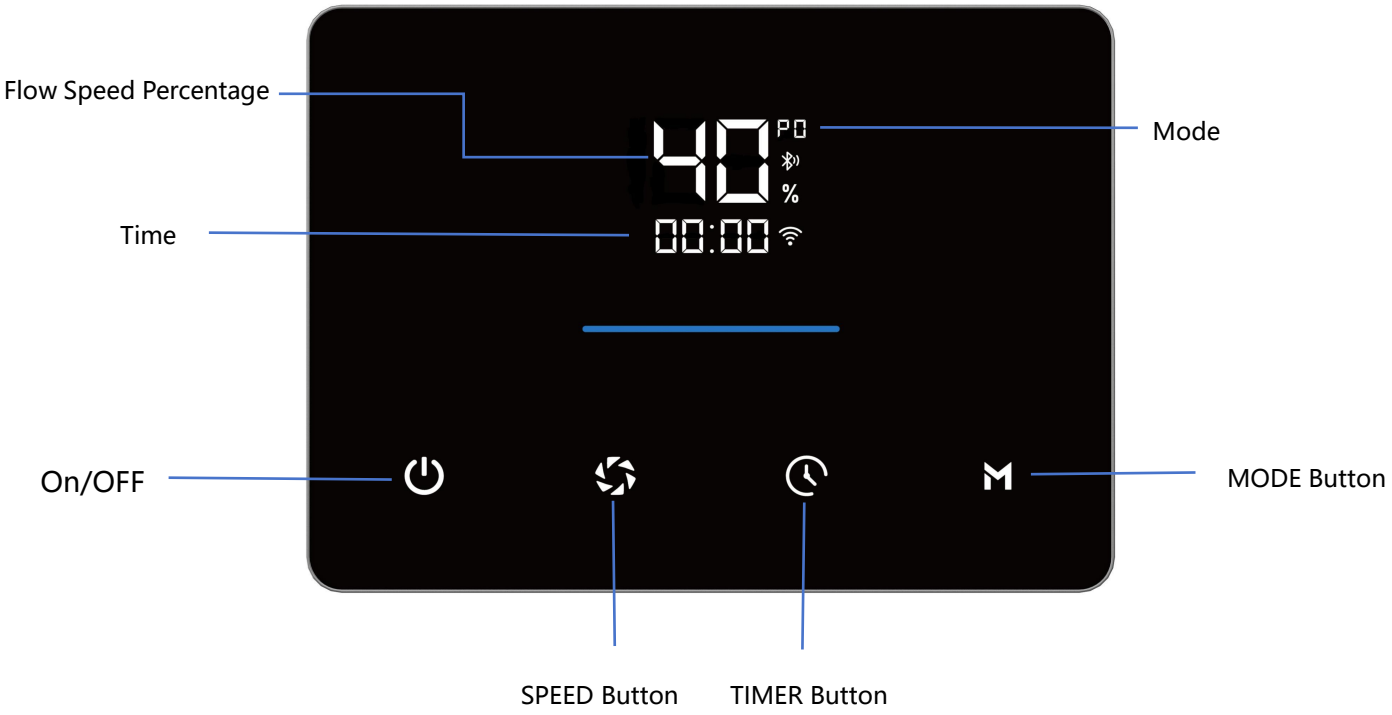

Name	Function	Description
ON/OFF	Power on	The control panel and the power box are connected normally. After the power box is powered on, press and hold the ON/OFF Button for 2 seconds to power on. The Jet will default to free mode upon startup.
	Power off	Hold for 2 seconds to power off. The memory flow rate will be saved before shutting down and will be used by default when the Jet is turned on next time.
	Pause	Quick click pause while the mode is running. If there is no operation for 30 minutes in the pause state, the system will automatically shut down.
	Resume	Quick click in the paused state to resume the pre-paused state.
MODE	Switch mode	Tap to switch to different modes, Free Mode(P0), Training Mode(P1-P4) and Surfing Mode(P5).
TIMER	Enter timer	Quick click to enter timer mode.
	Adjust different timer	Tap the TIMER button to adjust, there are six timers:15min，30min，45min，60min，75min, 90min.
SPEED	Adjust speed	Click the SPEED button to switch the flow speed, there are five speeds: 20%，40%，60%，80%，100%

8.3 Underwater Button (Optional) Description

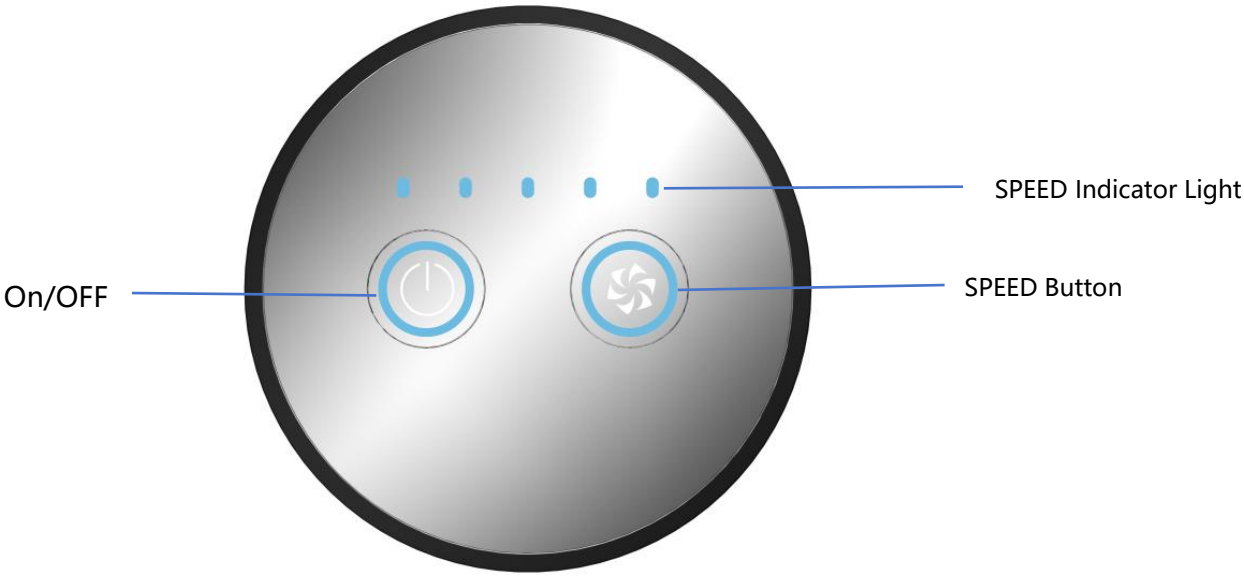

Name	Function	Description
ON/OFF	Power on	The control panel and the power box are connected normally. After the power box is powered on, press and hold the ON/OFF Button for 2 seconds to power on. The Jet will default to free mode upon startup.
	Power off	Hold for 2 seconds to power off. The memory flow rate will be saved before shutting down and will be used by default when the Jet is turned on next time.
SPEED	Adjust speed	Click the SPEED button to switch the flow speed, there are five speeds: 20%，40%，60%，80%，100%. When the flow rate changes, the gear position will change with the speed change. 20% corresponds to 1 light, 40% corresponds to 2 lights, and so on.

8.4 Power Box Display Instructions

Power box aperture color	Status	Illustrate
White	Standby state	Including shutdown, pause, menu settings and other states
Blue	Start state (motor on)	Indicates that the device is running
Red	Fault status	Indicates that there is an abnormality or failure in the device

8.5 Mode Description

8.5.1 Mode Introduction

Mode Type	P0(Free)	P1(Beginner)	P2(Intermediate)	P3(Advanced)	P4(Endurance)	P5(Surfing)
Duration	Optional	15mins	20mins	25mins	30mins	Continued
Percentage of speed range	20% - 100%	20% - 35%	45% - 70%	70% - 85%	45% - 65%	30% - 100%
Feature	Supports manual setting of flow rate levels (20%, 40%, 60%, 80%, 100%), with no time limit, suitable for daily relaxation or technical practice.	Gentle flow with adjustable intensity—perfect for beginners and aquatic rehabilitation.	High-intensity mode with power ranging from 70% to 85%. Features strong wave patterns designed for advanced swimmers.	The flow rate is continuously at a high level, with intermittent changes, ranging from 70% to 85% with greater wave	Endurance training, focusing more on the continuity of swimming training.	Dynamic rapid flow with quick transitions, simulating an authentic surfing environment.

Note: In surfing mode, the water flow changes at a high rate and has a certain impact force. Users are advised to wear appropriate swimming equipment, such as swimming rings, floating sleeves, back floats, etc., while wearing a swimming cap and goggles to ensure safety.

8.5.2 Mode Flow Speed Details

Swim Jet has 6 modes, free mode (P0), training mode (P1, P2, P3, P4), surfing mode (P5). You can switch between different modes by clicking the MODE button M.

P0(Free):

Duration	Optional
Inverter Speed	20%, 40%, 60%, 80%,100%

P1(Beginner):

Duration	0-2min	3-5min	6min	7-9min	10min	11-13min	14-15min
Inverter Speed	20%	30%	20%	35%	20%	30%	20%

P2(Intermediate):

Duration	0-3min	4-6min	7-8min	9-12min	13min	14-17min	18-20min
Inverter Speed	45%	55%	45%	70%	45%	55%	45%

P3(Advanced):

Duration	0-5min	6-9min	10min	11-14min	15min	16-20min	21-25min
Inverter Speed	70%	80%	70%	85%	70%	80%	70%

P4(Endurance):

Duration	0-7min	8-24min	25-30min
Inverter Speed	45%	65%	45%

P5(Surfing):

Duration	Continued
Inverter Speed	Quickly switch between 30% and 100%.

8.6 Speed Adjustment

Click the SPEED button to switch the speed in sequence (20%/40%/60%/80%/100%). In training modes P1~P4, click the SPEED button can change the speed, but it is only valid for the current time period and will not affect the entire training plan.

Note: In Surfing mode, the speed cannot be adjusted.

8.7 Timing Setting

Click the TIMER button to enter the setting state, click again to select the training time (15/30/45/60/75/90 minutes), and you can also select 5 flow speeds (20%/40%/60%/80%/100%). The timer mode will automatically start after 3 seconds of no operation, and the time will start to count down. After the countdown ends, the running time and speed will flash, and then enter the free mode. The speed can be adjusted at any time during the timer mode. Press the MODE button switch to exit timer mode , this is also applies to other operating modes.

9. How to Use the Remote

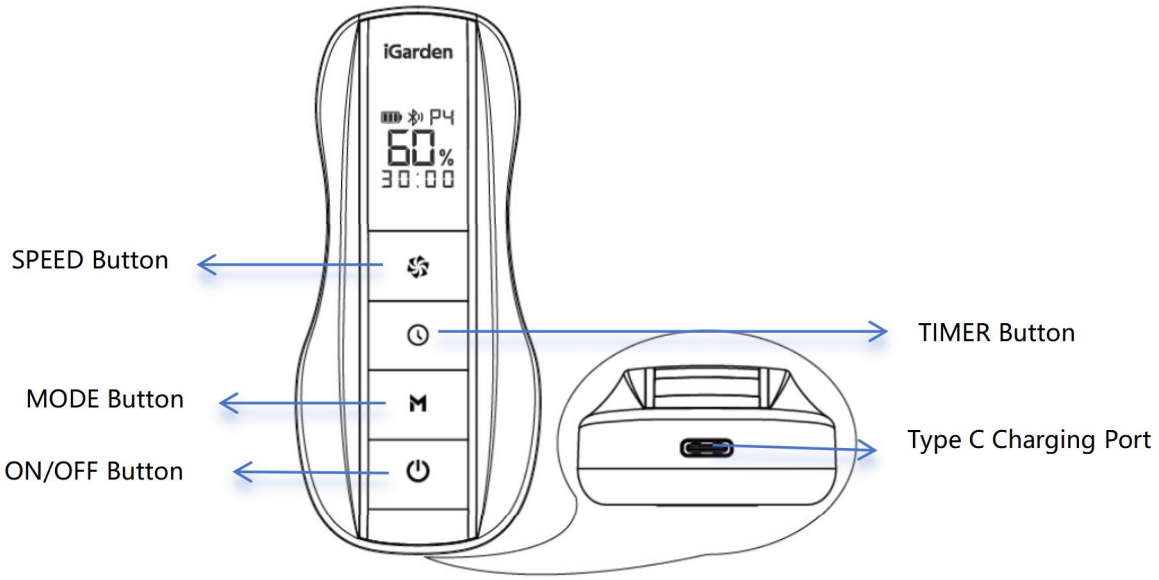

9.1 Power On

9.1.1 Operating Steps

• In the powered-off state, press and hold the Power On/Off button for 2 seconds. The remote screen will light up and display .

• After successful Bluetooth pairing, the screen will synchronize and display real-time information from the control panel (e.g., current flow rate intensity, operating time, current mode, Bluetooth connection status).

9.1.2 Remote Placement

• The remote can be magnetically attached to the right side of the power box, the location has dedicated magnetic attachment points and are marked with stickers for easy identification and placement.

9.1.3 Bluetooth Connection Error Handling

• If the Bluetooth connection fails, the interface will become unresponsive and the Bluetooth icon will flash rapidly. To resolve this, move closer to the control panel (the signal source) to allow for automatic reconnection. Once re-established, the interface will automatically synchronize with the control panel data.

• When powered on, the remote' s button operations function the same as the control panel, and their information remains synchronized in real time.

9.1.4 Transmission Range Description

• The effective Bluetooth transmission range between the remote and the control panel is 20 meters(≤20 meters) (in an ideal unobstructed environment-there is no obstruction between the remote and the control panel). Actual range may be reduced due to obstacles or signal interference. It is recommended to keep the devices within line of sight during use.

9.1.5 Water Ingress Treatment

• Water ingress treatment: If the remote falls into the swimming pool, take it out as soon as possible and follow the steps below to handle it.

1. Shake off water: Gently shake the remote (opening facing downward) to remove water from ports/gaps.
2. Wipe the surface: Use a dry cloth to absorb moisture from the casing, charging port, etc.

Note: Do not turn on or charge the device if there is any residual moisture, and do not use high temperature drying.

9.2 Power Off

9.2.1 Operating Steps

• Press and hold the Power On/Off button for 2 seconds until the screen turns off.

• If the control panel is on, turning off the remote will also trigger the control panel to shut down.

9.3 Power Management

The power status display bar has 3 battery grids. Please charge in time when the power is low (only one grid left).

a. Charging Method: Please use the Type-C charging cable for charging. Plug one end of the charging cable into the charging port of the remote (the bottom directly below the remote) and the other end into the power adapter. Make sure the charging cable is firmly connected.

b. Charging Process: During the charging process, the power status display bar will show the charging progress. When the battery is fully charged, the charging indicator will show the full power grid.

c. Charging Temperature: Do not charge in high or low temperature environments. The charging environment temperature range is: 0~45°C.

d. Continuous Charging time: The battery cannot be charged continuously for more than 24 hours.

9.4 Storage Requirements

To ensure the performance and life of the remote, please store it within the following temperature range:

• Short-term storage (within 1 month): -20℃ to 45℃.

• Medium-term storage (within 3 months): -20℃ to 35℃.

• Long-term storage (within 1 year): -20℃ to 25℃.

Note: If the remote is stored for more than 3 months in the factory state, it is recommended to charge it once, and the charging capacity can be maintained at 75% (2 grids) to keep the battery healthy.

9.5 Bluetooth Re-Pairing

If you replace the remote or control panel, you must re-pair them according to the following instructions:

• Before replacing the new remote, make sure that the old remote is not within the effective signal range, to clear the pairing information of the old remote.

• Clearing the pairing information of the old remote: With the power box turned off, press and hold the MODE button + TIMER button simultaneously for 2 seconds to clear the pairing information of the remote.

Pairing Steps:

1. After the power box and control panel are turned on, press the MODE button + TIMER button on the control panel at the same time and hold for 2 seconds to enter the Bluetooth distribution mode.

2. Make sure the remote is within the transmission range (20m) of the control panel.

3. On the remote, press and hold the MODE button + TIMER button for 2 seconds to enter pairing mode. During pairing, the Bluetooth icon flashes slowly. Once paired, the icon stays lit. If pairing fails within 1 minute, the icon flashes rapidly again.

• If pairing is not completed within 1 minute, the Bluetooth icon will return to the rapid flashing state.

Note: After completing Bluetooth pairing, the remote will automatically connect to the control panel via Bluetooth every time it is turned on. If the connection is successful, the Bluetooth icon will always light up. If the connection fails, it will enter a fast flashing state.

9.6 Product Specifications

• Communication method: Bluetooth BLE

• Battery type: lithium battery

• Charging interface: Type-C

• Operating temperature: -20-60 °C

• Storage temperature: -20-60 °C

10. APP Control

10.1 APP Download

Please search "**iGarden**" iGarden in the application market to download.

- Android users: You can search and download through the **Google Play** Google Play application market.
- For iOS users, you can search and download through the **App Store**. App Store

10.2 Account Registration and Login

After downloading, you can register and log in your account by **email** or **phone number**.

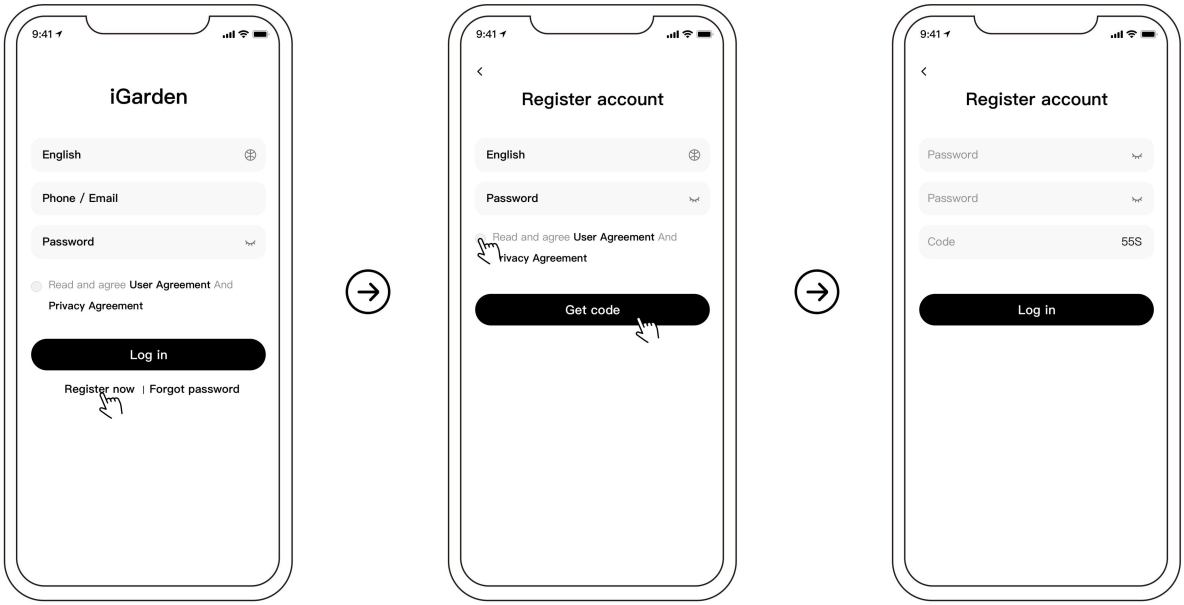

10.3 Adding Devices and Networking

10.3.1 Bluetooth Networking Mode

1. After the power box is turned on, press and hold and of the control panel at the same time for about 2 seconds until the Wi-Fi icon flashes, and then it enters the network mode.

2. Open **iGarden APP** and click "Add Device" button.

3. Follow the APP instructions to complete the device connection, then your device will be displayed in Home -**My Garden**.

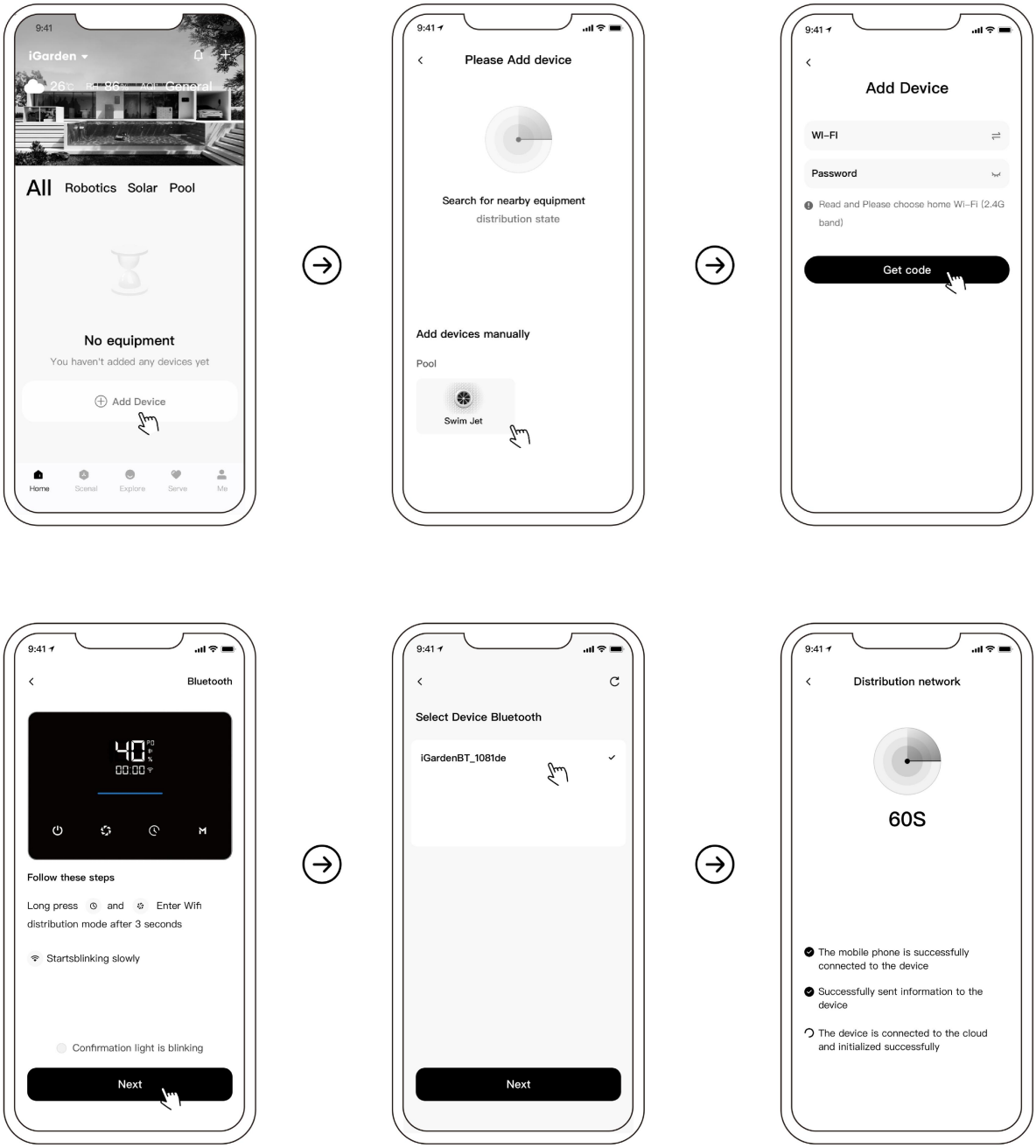

10.3.2 WiFi Hotspot Networking Mode

The operation is the same as the Bluetooth mode, select **"WiFi hotspot"** mode to operate, and follow the prompts to complete the connection.

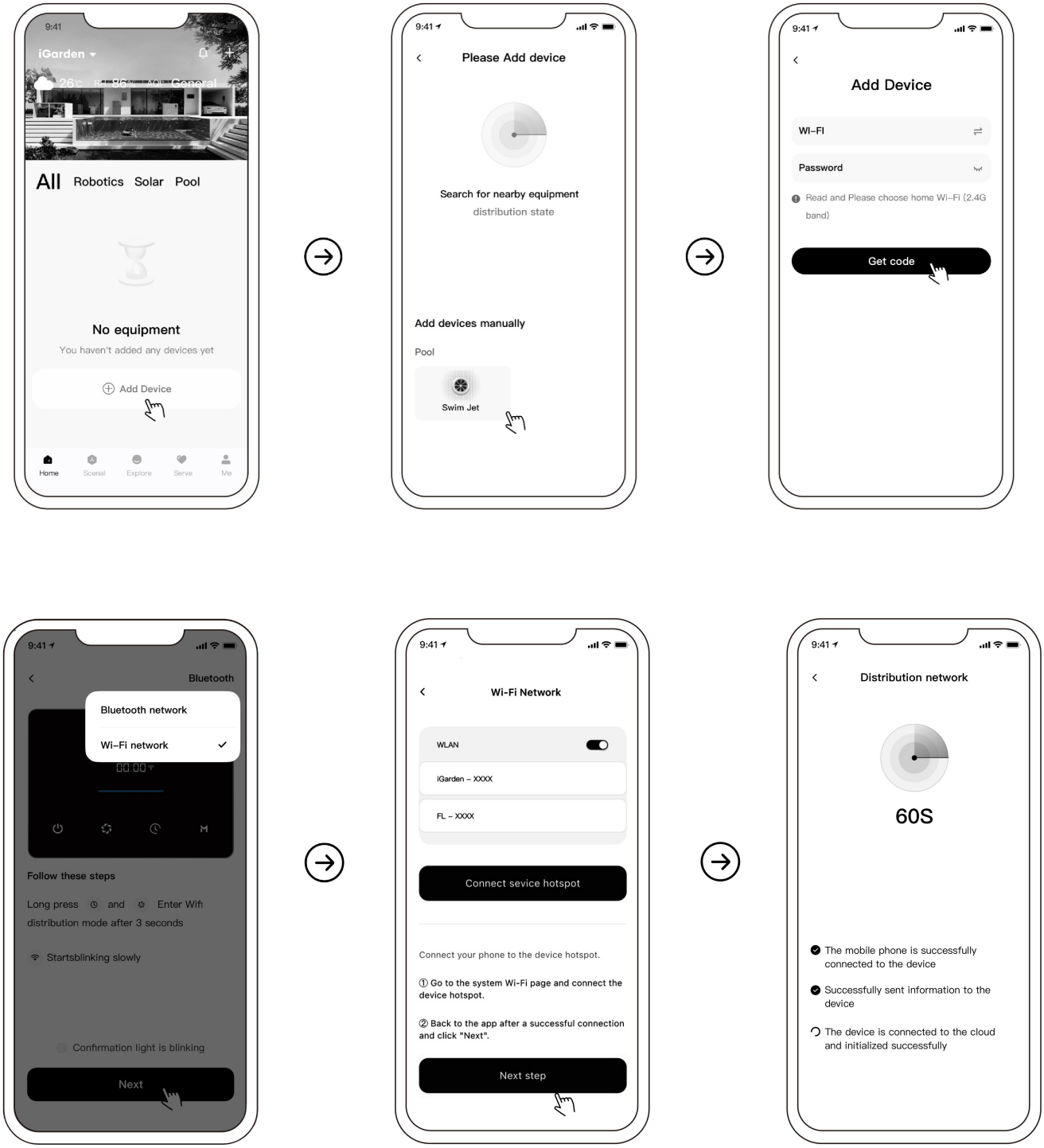

10.4 Interface Functions

10.4.1 Interface Control

After clicking on the device to start, it will enter the free mode by default. The operation page is as follows. Users can switch modes, adjust speed, set time and turn on or off.

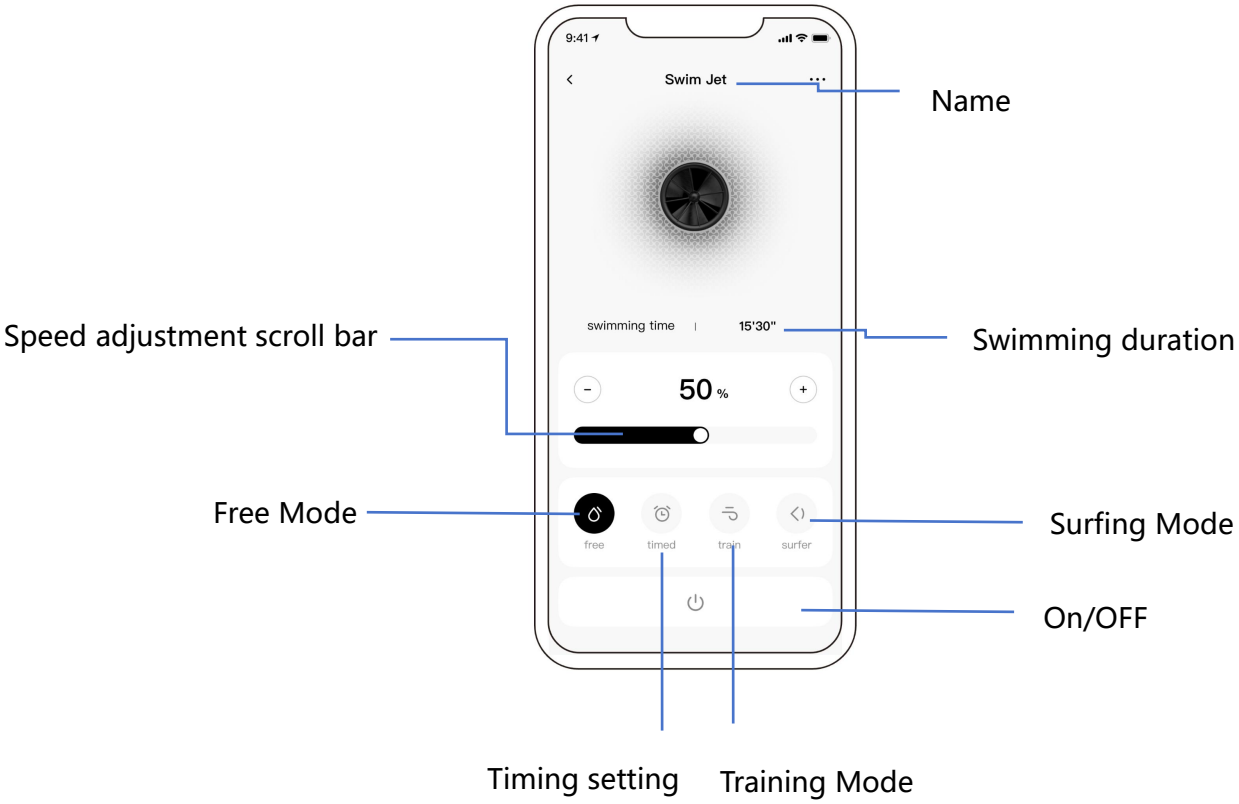

10.4.2 Customized training plan

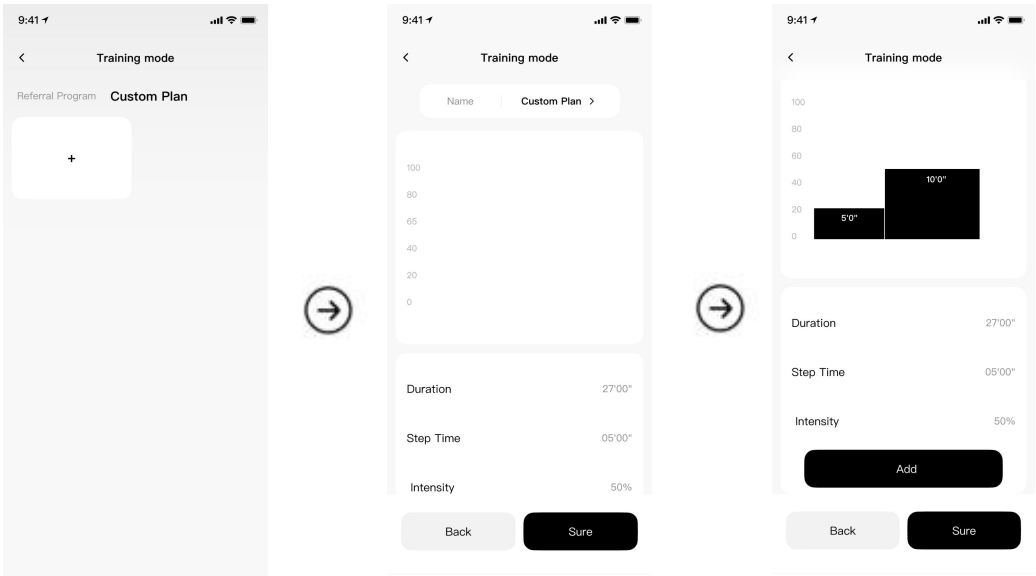

10.4.3 Sharing Devices

As a iGarden manager, you can share a device for use by other users via the device details page.

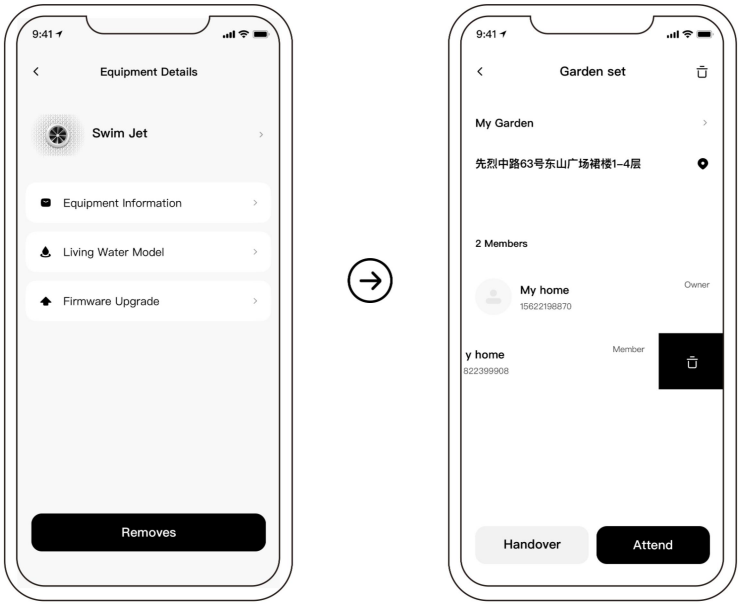

10.4.4 Fault Alarm

During the use of the product, if a device fault occurs, the fault name and fault code will be displayed on the device control page or message center. If the fault cannot be resolved by yourself, please contact the dealer for processing.

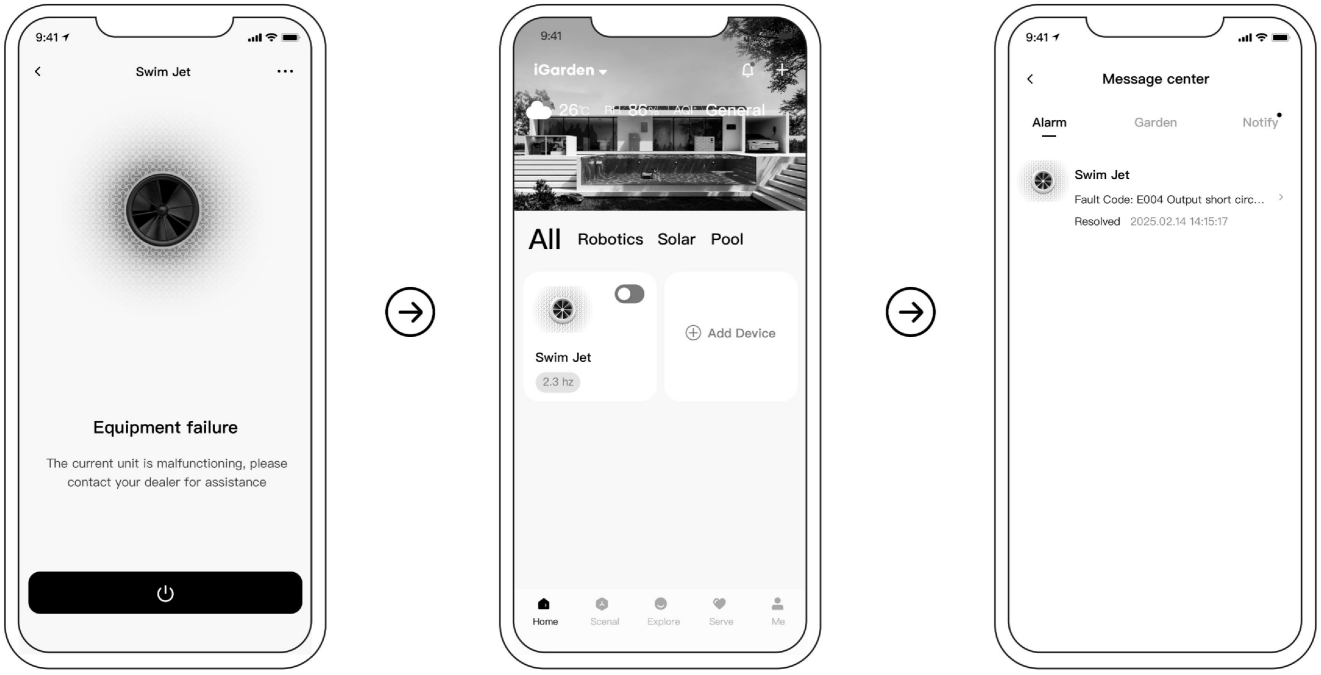

11. Product Care and Maintenance

When the product is not used for a long time, disassemble the Jet for indoor storage.

1. Turn off the power;
2. Disconnect the power supply cable;
3. Disconnect the control cable on the bottom of power box and control panel;
4. Store the power box and control panel in a dry, indoor location.

Special Precautions for Winter Storage:

In winter, please lower the pool water level to below the Jet to ensure that the Jet is not immersed in water.

⚠ WARNING: When storing the Jet cable, always secure the plug with its protective cap to prevent corrosion and exposure to moisture.

12. Failure and Protection

12.1 Fault Detection

• Fault Occurrence: When the Swim Jet detects a fault (except for speed reduction strategies), it will automatically shut down and display a fault code.

• Auto-Recovery: After 30 seconds of shutdown, if the fault is resolved, the device will automatically restore to its pre-fault state. If the fault reoccurs, it will shut down again and display the fault code, continuing to wait in 30-second intervals until resolved.

• Fault Lockout: If three faults occur within one hour, the system will lock the fault state and disable auto-recovery. In this case, manual power cycling by a technician is required. When multiple faults occur, you can press and to switch to view the fault information, if there is no operation, the screen will automatically switch the display every 5 seconds.

• Note: The above is the fault detection process except motor stalling (error code E0 06). Once the motor is stalled, the Jet will stop immediately. Please cut off the power and reconnect it before resuming to operate.

The fault diagram is as follows, the top right corner of the screen 11 for the total number of errors, right in the middle 01 for the current error number, the bottom E0 01 for the error code.

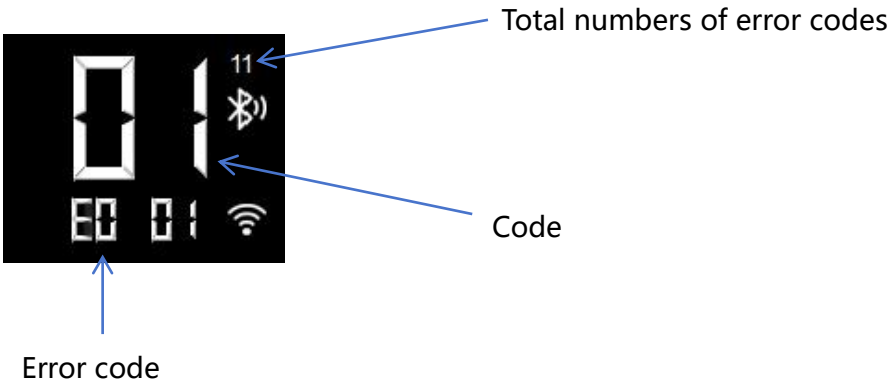

12.2 Error Codes List:

SN	Error code	Description	Reason
1	E0 01	Abnormal bus voltage	The bus voltage effective value deviates from the normal operating voltage range (too low or too high)
2	E0 02	Output current overload fault	Swim Jet current peak is greater than the preset maximum.
3	E0 03	Output current imbalance	The 3 output currents are unbalanced.
4	E0 04	Output shorted	Output wires (wires from the box to the Jet) are short-circuited or high current is present.
5	E0 05	Output Out-of-Phase	Poor contact of output cables or internal wiring problems
6	E0 06	Motor stalling	The motor is tangled or stuck by foreign objects and cannot rotate
7	E0 07	Motor Water Insufficiency Protection	The motor is not completely immersed in water, and it goes into fault and shuts down after running for 30 seconds.
8	E1 01	MOS overheating	The temperature of the mos tube on the driver board is too high.
9	E1 02	High temperature for power box	The internal temperature of the power box is too high.
10	E2 01	Temperature sensor failure	The temperature sensor on the driver board or the temperature sensor circuit on the display board is damaged.
11	E2 02	Motor drive failure	The driver board is damaged or the motor control is abnormal.
12	E2 03	Driver Board Communication Failure	The driver board fails to communicate with the main control for 30 consecutive seconds.
13	E2 04	Display communication failure	The communication between the display screen and the power box failed for 5 consecutive seconds.

12.3 Speed Reduction Protection

In order to ensure the safe operation of the Jet, the power box is equipped with the following three kinds of downspeed protection mechanisms:

1. MOS tube high temperature speed limit description

- When the temperature of MOS tube exceeds the set value, the system will automatically slow down, at this time, the interface will alternate between the normal working interface and the MOS tube high temperature warning (The control panel interface displays A1).

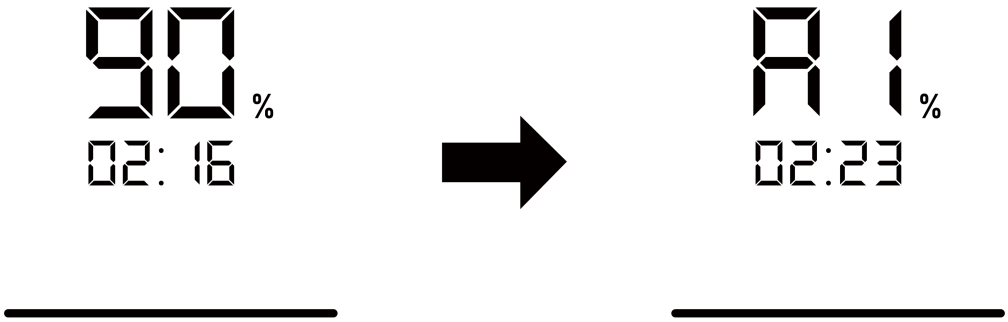

- When the temperature of the MOS tube is too high, the system shuts down and reports an E101 fault.

2. Chassis high temperature protection

- When the chassis temperature exceeds the set value, the system will automatically slow down, at this time the interface will alternate between the normal working interface and the chassis high temperature warning (The control panel interface displays A2).

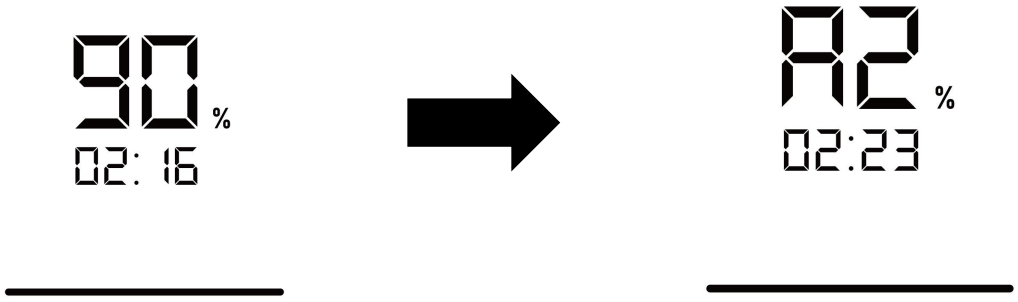

- When the chassis temperature is too high, the system will shut down and report E102 fault.

3. Output current overload protection

• When the output current exceeds the set value, the system will automatically slow down, at this time the interface will alternate between the normal working interface and the output current overload warning (The control panel interface displays A3).

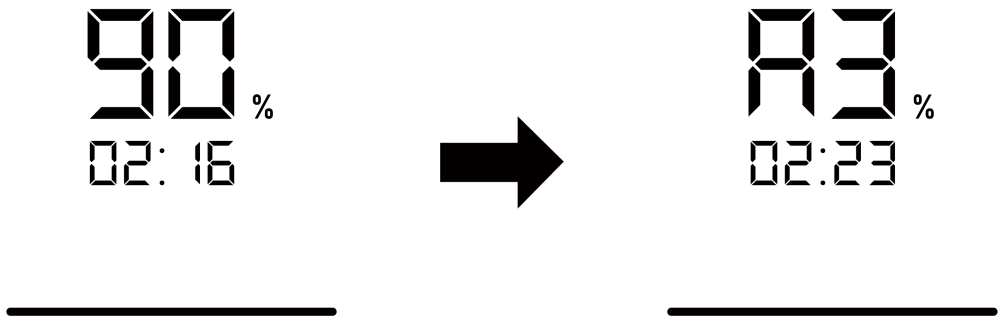

• When the output current is too high, the system will shut down and report E002 fault.

Note: In any protection state, the device will automatically adjust the speed to prevent damage and ensure the safe operation of your device.

13. FAQ & Solutions

Problem	Reason	Solution
Loud noise	• The Jet is not fully submerged in water	• Make sure the Jet is fully submerged in water • Recommended installation depth for the Swim Jet (center of the Swim Jet to the water surface): 250mm
Weak flow	• The Jet is not parallel to the water surface	• Check if the Swim Jet mounting bracket is properly adjusted.
	• Motor doesn’t work	• If the motor does not work properly, please contact your dealer.
No LCD display	• The control panel is not connected to the power supply or the switch is off. • Display panel receiving signal failure	• Ensure that the control panel is powered on and the switch is open.

14. Disposal

14.1 Decommissioning

1.Switch off the power.

2.Turn off the power around the pool.

3.Disconnect the power cord.

4.Disconnect the motor cable under the power box.

14.2 Disposal

When disposing of this product, please sort it into electrical or electronic product waste or give it to your local waste recycling system. By recovering and recycling the device separately at the point of disposal, you can ensure that it is disposed of in a manner that is beneficial to human health and the environment. Contact your local authorities to find out where you can recycle your Swim Jet.

15. Certification Standards

All Swim Jet models comply with the following specific standards:

LVD Instruction：2014/35/EU	
■ EN 60335-1	
■ EN 60335-2-41	
■ EN 62233:2008	
EMC Instruction：2014/30/EU	
■ EN 55014-1	■ EN 55014-2
■ EN 61000-3-2	■ EN 61000-3-3
■ AS/NZS 60335.2.41：2013 Amd 1： 2018	
■ AS/NZS 60335.1：2020 Amd1：2021	

H-05